The Cooperation Council For the
Arab States of the Gulf
The Secretariat General
GCC Patent Office

Patent Gazette

Patents GC 0001627- GC 0001823

Seventeenth Issue

08 Jumada'1 1433 H - 31 March 2012 AD

أ ت/ ز
13 PG
The Cooperation Council for the Arab States Of the Gulf.
Secretariat General. GCC Patent Office
Patent Gazette: Vol. 17,(31 March 2012).
- Riyadh: Secretariat General,2012.
295EP-298AP.27cm.
293-091-/B/G/P/2012.
Invention/Patents/Industrial Research/Technological/Innovation/Pamphlets/
Industrial Property/Intellectual Property/GCC Countries

GCC Patent Gazette

An official gazette periodically published by the GCC Patent Office and concerns with matters relating to patents

Prices

Individuals: 15 Saudi Riyals per one issue.
Entities, such as Establishments, Organizations, Companies, legal offices, and professionals: 30 Saudi Riyals per one issue.
An authentic check shall prepay the price of required issues. For obtaining the gazette, write to:

Patent Gazette

GCC Patent Office
P.O. Box 340227 Riyadh 11333
Kingdom of Saudi Arabia

- Once payments have been received, the office shall send the gazette by registered mail.
- For government bodies, the office shall send the gazette through registered mail.
-Electronic copy of this Gazette is available at the website of the GCC patent Office:
www.gccpo.org

Contents

Sr	Subject	Page
1	Introduction	7
2	About the GCC Patent Office	9
3	Intenational Codes for Bibliographic Data Elements	13
4	List of Codes of States and International Organizations	15
5	List of Granted Patents	21
6	The Front Pages of Granted Patents	34
7	List of Lapsed Patent Applications and Lapsed Patents	232
8	List of Rejected Patent Applications	260
9	List of Patent Applications and Patents with Change of Ownership	269
10	List of Withdrawn Administrative Decisions	275
11	Rectifications	279

Introduction

The "Patent Gazette" issued by the Patent Office of the Cooperation Council for the Arab States of the Gulf concerns with publishing disclosures set forth in the GCC Patent Regulation and its Implementing Bylaws. The disclosures are represented by the data and information related to patent applications and patents with the Office for the period covered. This issue; (Issue # 17) of the Gazette comes in view of growth of the Office functions to cover Office activities relating to applications and patents during the period 01/07/2011 to 31/12/2011 , In addition to activities that were not published previously. This issue includes the following:

1) list of granted patents.
2) The front pages of the granted patents.
3) list of lapsed patent applications and Lapsed Patents.
4) list of rejected patent applications.
5) list of patent applications and patents with change of ownership.
6) list of withdrawn Administrative Decisions .
7)Rectifications.

This issue will include the publication of granting of (197) patents by the Office after satisfying the conditions of grants and payment of grant and publication fees thereof.

Documents of (147) patents published in the previous issue were handed over to their owners as no concerned parties objected to the grant of any.

The Regulation allows any concerned individual having any objection to the grant of any patent published in this issue to submit within 3 months an appeal to the Grievances Committee in accordance with the
procedures set forth in the Implementing Bylaws at the following address:

Secretary of the Grievances Committee
Patent Office of the Cooperation Council for the Arab States of the Gulf
The Secretariat General of the Cooperation Council for the Arab States of the Gulf

P.O. Box 340227, Riyadh 11333, Saudi Arabia
Tel: +96614827777, Ext. 1026
Fax: +96614809768
Email: grievance@ gccsg.org

Paper copies of this Gazette can be obtained from Patent Office of the Cooperation Council for the Arab States of the Gulf and electronic copies, however, are available at the website of the GCC Patent Office: www.gccpo.org

The Secretariat General of the Cooperation Council
for the Arab States of the Gulf (GCC)
GCC Patent Office

About the GCC Patent Office

The GCC Patent Office is a regional office that receives patent applications in the member states of the Gulf Cooperation Council, which are: The United Arab Emirates, Kingdom of Bahrain, Kingdom of Saudi Arabia, Sultanate of Oman, State of Qatar, and State of Kuwait to obtain patents and protection of inventions in the said countries.

The Office grants patents for applications filed, provided they fulfill the conditions .stipulated in the GCC Patent Regulation and its Implementing Bylaws

Patents granted by the Office shall be valid in all GCC Member States, and shall need no further processing in any GCC Member State.

The GCC Patent Regulation prohibits infringement of patents granted by the Office. Such infringement shall be subject to criminal or civil responsibility, or both as per the laws and regulations of each GCC State.

For more information, the office may be contacted at:

Tel.: (009661) 4820136, 4820260
Fax: (009661) 4829600
E-mail: gccpatent@gccsg.org
Website: www.gccpo.org

Intenational Codes

International Codes for Bibliographic Data Elements* Included in the First Pages of Granted Patents

Bibliographic Data Element	Code
Number of the Patent	11
Designation of the Kind of Document	12
Number of the Application	21
Date of Filing the Application	22
Data relating to Priority	30
Number(s) assigned to Priority Application(s)	31
Date(s) of Priority Application(s)	32
Priority Country	33
Date of Publishing the Grant of the Patent	45
International Patent Classification	51
Title (Naming) of the Invention	54
List of Cited Prior Art Documents	56
Abstract	57
Name(s) of Inventor(s)	72
Name(s) of Owner(s) – i.e. Grantee(s), Holder(s) or Assignee(s)	73
Name of Agent (Attorney)	74

* According to WIPO Standard ST.9 (February 2008); "Recommendation Concerning Bibliographic Data on and Relating to Patents and SPCS [Supplementary Protection Certificates]". Refer to the following address:
http://www.wipo.int/export/sites/www/standards/en/pdf/03-09-01.pdf

List of Codes of States and International Organizations *

Country	Code	Country
AFGHANISTAN	AF	COMOROS
AFRICAN INTELLECTUAL PROPERTY ORGANIZATION (OAPI)	OA	CONGO (see Congo, below; Democratic Republic of the Congo)
AFRICAN REGIONAL INTELLECTUAL	AP	CONGO
ALBANIA	AL	COOK ISLANDS
ALGERIA	DZ	COSTA RICA
ANDORRA	AD	CÔTE D'IVOIRE
ANGOLA	AO	CROATIA
ANGUILLA	AI	CUBA
ANTIGUA AND BARBUDA	AG	CURAÇAO
ARGENTINA	AR	CYPRUS
ARMENIA	AM	CZECH REPUBLIC
ARUBA	AW	DEMOCRATIC PEOPLE'S REPUBLIC OF KOREA
AUSTRALIA	AU	DEMOCRATIC REPUBLIC OF THE CONGO
AUSTRIA	AT	DENMARK
AZERBAIJAN	AZ	DJIBOUTI
BAHAMAS	BS	DOMINICA
BAHRAIN	BH	DOMINICAN REPUBLIC
BANGLADESH	BD	ECUADOR
BARBADOS	BB	EGYPT
BELARUS	BY	EL SALVADOR
BELGIUM	BE	EQUATORIAL GUINEA
BELIZE	BZ	ERITREA
BENELUX OFFICE FOR INTELLECTUAL PROPERTY (BOIP)	BX	ESTONIA
BENIN	BJ	ETHIOPIA
BERMUDA	BM	EURASIAN PATENT ORGANIZATION (EAPO)
BHUTAN	BT	EUROPEAN PATENT OFFICE (EPO)
BOLIVIA, PLURINATIONAL STATE OF	BO	FALKLAND ISLANDS (MALVINAS)
BONAIRE, SINT EUSTATIUS AND SABA	BQ	FAROE ISLANDS
BOSNIA AND HERZEGOVINA	BA	FIJI
BOTSWANA	BW	FINLAND
BOUVET ISLAND	BV	FRANCE
BRAZIL	BR	GABON
BRUNEI DARUSSALAM	BN	GAMBIA
BULGARIA	BG	GEORGIA
BURKINA FASO	BF	GERMANY
BURUNDI	BI	GHANA
CAMBODIA	KH	GIBRALTAR
CAMEROON	CM	GREECE
CANADA	CA	GREENLAND
CAPE VERDE	CV	GRENADA
CAYMAN ISLANDS	KY	GUATEMALA
CENTRAL AFRICAN REPUBLIC	CF	GUERNSEY
CHAD	TD	GUINEA
CHILE	CL	GUINEA–BISSAU
CHINA	CN	GULF COOPERATION COUNCIL (see Patent Office of the Cooperation Council for the Arab States of the Gulf)
COMMUNITY PLANT VARIETY OFFICE (EUROPEAN UNION)(CPVO)	QZ	GUYANA
COLOMBIA	CO	HAITI

* According to WIPO Standard ST.3 (November 2011); "Recommended Standard on Two-Letter Codes Representation of States, Other Entities and Intergovernmental Organizations]". Refer to the fo address:
http://www.wipo.int/standards/en/pdf/03-03-01.pdf

List of Codes of States and International Organizations *

Country	Code	Country	Code
HOLY SEE	VA	MEXICO	MX
HONDURAS	HN	MOLDOVA (see Republic of Moldova)	
HONG KONG (See The Hong Kong Special Administrative Region of the People's Republic of China)		MONACO	MC
HUNGARY	HU	MONGOLIA	MN
ICELAND	IS	MONTENEGRO	ME
INDIA	IN	MONTSERRAT	MS
INDONESIA	ID	MOROCCO	MA
INTERNATIONAL BUREAU OF THE WORLD INTELLECTUAL PROPERTY ORGANIZATION (WIPO)	IB WO	MOZAMBIQUE	MZ
IRAN, ISLAMIC REPUBLIC OF	IR	MYANMAR	MM
IRAQ	IQ	NAMIBIA	NA
IRELAND	IE	NAURU	NR
ISLE OF MAN	IM	NEPAL	NP
ITALY	IT	NETHERLANDS	NL
JAMAICA	JM	NEW ZEALAND	NZ
JAPAN	JP	NICARAGUA	NI
JERSEY	JE	NIGER	NE
JORDAN	JO	NIGERIA	NG
KAZAKHSTAN	KZ	NORDIC PATENT INSTITUTE (NPI)	XN
KENYA	KE	NORTHERN MARIANA ISLANDS	MP
KIRIBATI	KI	NORWAY	NO
KOREA (see Democratic People's Republic of Korea; Republic of Korea)		OMAN	OM
KUWAIT	KW	PAKISTAN	PK
KYRGYZSTAN	KG	PALAU	PW
LAO PEOPLE'S DEMOCRATIC REPUBLIC	LA	PANAMA	PA
LATVIA	LV	PAPUA NEW GUINEA	PG
LEBANON	LB	PARAGUAY	PY
LESOTHO	LS	PATENT OFFICE OF THE COOPERATION COUNCIL FOR THE ARAB STATES OF THE GULF (GCC)	GC
LIBERIA	LR	PERU	PE
LIBYA	LY	PHILIPPINES	PH
LIECHTENSTEIN	LI	POLAND	PL
LITHUANIA	LT	PORTUGAL	PT
LUXEMBOURG	LU	QATAR	QA
MACAO	MO	REPUBLIC OF KOREA	KR
MACEDONIA (see The former Yugoslav Republic of Macedonia)		REPUBLIC OF MOLDOVA	MD
MADAGASCAR	MG	ROMANIA	RO
MALAWI	MW	RUSSIAN FEDERATION	RU
MALAYSIA	MY	RWANDA	RW
MALDIVES	MV	SAINT HELENA, ASCENSION AND TRISTAN DA CUNHA	SH
MALI	ML	SAINT KITTS AND NEVIS	KN
MALTA	MT	SAINT LUCIA	LC
MAURITANIA	MR	SAINT VINCENT AND THE GRENADINES	VC
MAURITIUS	MU	SAMOA	WS

List of Codes of States and International Organizations *

Country	Code	Country	Code
SAN MARINO	SM	THE HONG KONG SPECIAL ADMINISTRATIVE REGION OF THE PEOPLE'S REPUBLIC OF CHINA	HK
SAO TOME AND PRINCIPE	ST	TIMOR–LESTE	TL
SAUDI ARABIA	SA	TOGO	TG
SENEGAL	SN	TONGA	TO
SERBIA	RS	TRINIDAD AND TOBAGO	TT
SEYCHELLES	SC	TUNISIA	TN
SIERRA LEONE	SL	TURKEY	TR
SINGAPORE	SG	TURKMENISTAN	TM
SINT MAARTEN (Dutch part)	SX	TURKS AND CAICOS ISLANDS	TC
SLOVAKIA	SK	TUVALU	TV
SLOVENIA	SI	UGANDA	UG
SOLOMON ISLANDS	SB	UKRAINE	UA
SOMALIA	SO	UNITED ARAB EMIRATES	AE
SOUTH AFRICA	ZA	UNITED KINGDOM	GB
SOUTH GEORGIA AND THE SOUTH SANDWICH ISLANDS	GS	UNITED REPUBLIC OF TANZANIA	TZ
SOUTH SUDAN	SS	UNITED STATES OF AMERICA	US
SPAIN	ES	URUGUAY	UY
SRI LANKA	LK	UZBEKISTAN	UZ
SUDAN	SD	VANUATU	VU
SURINAME	SR	VATICAN CITY STATE (See Holy See)	
SWAZILAND	SZ	VENEZUELA, BOLIVARIAN REPUBLIC	VE
SWEDEN	SE	VIET NAM	VN
SWITZERLAND	CH	VIRGIN ISLANDS, BRITISH	VG
SYRIAN ARAB REPUBLIC	SY	WESTERN SAHARA	EH
TAIWAN, PROVINCE OF CHINA	TW	WORLD INTELLECTUAL PROPERTY ORGANIZATION (WIPO) (INTERNATIONAL BUREAU OF)	WO IB
TAJIKISTAN	TJ	YEMEN	YE
TANZANIA (see United Republic of Tanzania)		ZAMBIA	ZM
THAILAND	TH	ZIMBABWE	ZW
THE FORMER YUGOSLAV REPUBLIC OF MACEDONIA	MK		

List of Granted Patents

List of Granted Patents

Sr	Application No	Title of Invention	Patent No	Date of Grant	Valid Until	Page
1	GCC/P/2005/5438	Integrated Acid Gas And Sour Gas Reinjection Process	GC0001627	11/07/2011	26/11/2025	34
2	GCC/P/2008/11203	Evaporative Cooler Using Advanced Traverse Fan Without Fan Housing	GC0001628	22/08/2011	29/06/2028	35
3	GCC/P/2004/3445	Process And Plant For Producing Metal Ocide From Metal Compounds	GC0001629	26/06/2011	07/05/2024	36
4	GCC/P/2004/3443	Method And Plant For The Heat Treatment Of Line-Grained Solids	GC0001630	26/06/2011	07/05/2024	37
5	GCC/P/2005/5127	Method For Stably Producing An Aromatic Polycarbonate	GC0001631	15/06/2011	06/09/2025	38
6	GCC/P/2004/3292	Production Of Linear Alkyl Benzene	GC0001632	15/06/2011	09/03/2024	39
7	GCC/P/2007/7847	Method And Apparatus For Safely Processing Sensitive Information	GC0001633	05/06/2011	25/02/2027	40
8	GCC/P/2002/2220	Integrated Process For Hydrocarbon Synthesis	GC0001634	29/05/2011	21/09/2022	41
9	GCC/P/2005/5597	Process For The Manufacture Of 1,2-Dichloroethane	GC0001635	14/06/2011	20/12/2025	42
10	GCC/P/2007/7638	Oil Suspension Concentrates Comprising Diflufenican	GC0001636	28/05/2011	19/01/2027	43
11	GCC/P/2007/8000	Analysis Of Fuel Combustion Characteristics	GC0001637	28/05/2011	25/03/2027	44
12	GCC/P/2005/4481	Cathode Element For Use In An Electrolytic Cell Intended For Production Of Aluminium	GC0001638	04/06/2011	27/03/2025	45
13	GCC/P/2005/5184	Drive Apparatus For A Slidable Divider Element, Drive Assembly And Divider Element	GC0001639	04/06/2011	19/09/2025	46
14	GCC/P/2006/7334	Method And Means For Operating An Electrolysis Cell	GC0001640	04/06/2011	04/12/2026	47
15	GCC/P/2006/7406	Gas Alarm System With Wind Direction Indicator	GC0001641	04/06/2011	12/12/2026	48
16	GCC/P/2007/8952	Scatter Attenuation Tomography	GC0001642	04/06/2011	24/08/2027	49
17	GCC/P/2005/4435	Catalyst Composition Comprising Shuttling Agent For Ethylene Multi-Block Copolymer Formation	GC0001643	16/06/2011	18/03/2025	50
18	GCC/P/2005/4437	Catalyst Composition Comprising Shuttling Agent For Higher Olefin Multi-Block Copolymer Formation	GC0001644	16/06/2011	18/03/2025	51

Sr	Application No	Title of Invention	Patent No	Date of Grant	Valid Until	Page
19	GCC/P/2006/5656	Method Of Expanding A Tubular Element In A Wellbore	GC0001645	04/06/2011	03/01/2026	52
20	GCC/P/2003/2771	Process For Treatment Of Underground Reservoirs	GC0001646	11/07/2011	11/07/2023	53
21	GCC/P/2006/6359	Apparatus With Flexibly Mounted Spud Carrier	GC0001647	05/06/2011	02/06/2026	54
22	GCC/P/2005/5009	Power Generation And Desalination System	GC0001648	15/06/2011	08/08/2025	55
23	GCC/P/2008/11205	Calculator Stapler & Puncher With Digital Clock	GC0001649	11/09/2011	29/06/2028	56
24	GCC/P/2008/11206	Compact Computer School Table	GC0001650	11/09/2011	29/06/2028	57
25	GCC/P/2005/5138	Highly Active Slurry Catalyst Composition	GC0001651	11/07/2011	09/09/2025	58
26	GCC/P/2004/3401	Compositon And Method For Treating A Subterranean Formation	GC0001652	26/06/2011	19/04/2024	59
27	GCC/P/2004/3528	Polyester Process Using A Pipe Reactor	GC0001653	26/06/2011	04/06/2024	60
28	GCC/P/2000/673	Improved Fischer-Tropsch Activity For «Non-Promoted» Cobalt -On- Alumina Catalysts	GC0001654	14/06/2011	26/05/2020	61
29	GCC/P/2003/2422	Integrated Process For The Manufacture Of Alkenyl Carboxylates	GC0001655	14/06/2011	31/12/2022	62
30	GCC/P/2003/2954	Mixed Metal Oxide Catalyst And Process For Production Of Acetic Acid	GC0001656	14/06/2011	05/10/2023	63
31	GCC/P/2004/4001	Hydroconversion Catalysts And Methods Of Making And Using Same	GC0001657	14/06/2011	19/11/2024	64
32	GCC/P/2004/4006	Production Of Propylene From Steam Cracking Of Hydrocarbons, Particularly Ethane	GC0001658	14/06/2011	19/11/2024	65
33	GCC/P/2005/4289	Pentafluorosulfanylbenzoylguanidines, Process For Their Preparation, Their Use As Medicament Or Diagnostic Aid, And Medicament Comprising Them	GC0001659	15/06/2011	11/02/2025	66
34	GCC/P/2005/4427	Compact Service Moudle For Use In Electrolytic Aluminium Production Plants	GC0001660	14/06/2011	15/03/2025	67
35	GCC/P/2005/4902	Process For Preparing Linear Alpha Olefins	GC0001661	14/06/2011	11/07/2025	68
36	GCC/P/2005/4927	Removal Of Residual Acetaldehyde From Polyster Polymer Particles	GC0001662	14/06/2011	22/07/2025	69

Sr	Application No	Title of Invention	Patent No	Date of Grant	Valid Until	Page
37	GCC/P/2005/5522	Process And Catalyst For The Manufacture Of Acetic Acid	GC0001663	14/06/2011	13/12/2025	70
38	GCC/P/2006/5782	Process For The Polymerisation Of Vinyl-Containing Monomers	GC0001664	14/06/2011	06/02/2026	71
39	GCC/P/2006/6914	Process For Operating A Distillation Column For The Purification Of 1,2-Dichloroethane And For The Coupled Concentration Of Caustic Soda Solution By Evaporation	GC0001665	14/06/2011	12/09/2026	72
40	GCC/P/2006/7493	Improved Streptococcus Pneumonia Vaccine	GC0001666	14/06/2011	19/12/2026	73
41	GCC/P/2007/8328	A Process For The Manufacture Of Carbon Disulphide	GC0001667	14/06/2011	14/05/2027	74
42	GCC/P/2007/8449	Container Assembly Having Stacking Means	GC0001668	15/06/2011	05/06/2027	75
43	GCC/P/2007/8752	Conjugation Process	GC0001669	14/06/2011	21/07/2027	76
44	GCC/P/2007/8803	Configurations And Methods For Rich Gas Conditioning For NGL Recovery	GC0001670	14/06/2011	29/07/2027	77
45	GCC/P/2007/8850	Organic-Inorganic Hybrid Silicates And Metal-Silicates Having An Ordered Structure	GC0001671	14/06/2011	05/08/2027	78
46	GCC/P/2003/3109	Immungolobulin Variants And Uses Thereof	GC0001672	14/06/2011	15/12/2023	79
47	GCC/P/2007/7850	Substituted Arylsulfonamides	GC0001673	14/06/2011	26/02/2027	80
48	GCC/P/2007/8845	Derivatives Of 5,6-Bisaryl-2-Pyridine-Carboxamide, Their Preparation And Their Application In Therapeutics As Antagonists Of Urotensin Ii Receptors	GC0001674	14/06/2011	04/08/2027	81
49	GCC/P/2006/7396	Hybrid 3 Untranslated Regions Suitable For Efficient Protein Expression In Mammalian Cells	GC0001675	14/06/2011	11/12/2026	82
50	GCC/P/2007/8762	Indole Derivatives	GC0001676	16/06/2011	23/07/2027	83
51	GCC/P/2007/8881	Non-Nucleoside Reverse Transcriptase Inhibitors	GC0001677	15/06/2011	10/08/2027	84
52	GCC/P/2001/1583	Prodrugs To Nmda Receptor Ligands	GC0001678	15/06/2011	20/08/2021	85
53	GCC/P/2004/3341	A Catalyst Composition, A Process For Preparing The Catalyst Composition And A Use Of The Catalyst Composition	GC0001679	26/06/2011	28/03/2024	86
54	GCC/P/2005/4506	Organochromium/Metallocene Combination Catalysts For Producing Bimodal Resins	GC0001680	12/09/2011	02/04/2025	87

Sr	Application No	Title of Invention	Patent No	Date of Grant	Valid Until	Page
55	GCC/P/2005/5265	Building Panel And Building Structure	GC0001681	04/06/2011	14/10/2025	88
56	GCC/P/2007/8539	Diverse Bubble Size Generation	GC0001682	15/09/2011	19/06/2027	89
57	GCC/P/2007/8232	Data Adaptive Vibratory Source Acquisition Method	GC0001683	15/09/2011	27/04/2027	90
58	GCC/P/2007/8924	Method For Removing Iodide Compound From Organic Acid	GC0001684	12/09/2011	19/08/2027	91
59	GCC/P/2007/9693	Process For Processing Ethylene Oxide Streams Containing Nox Or Organic Nitrogen Compounds	GC0001685	12/09/2011	10/12/2027	92
60	GCC/P/2007/9494	Hydro-Oxidation Process Using A Catalyst Prepared From A Gold Cluster Complex	GC0001686	12/09/2011	13/11/2027	93
61	GCC/P/2004/3776	Low Metal Content Catalyst Compositions And Processes For Making And Using Same	GC0001687	12/09/2011	03/09/2024	94
62	GCC/P/2003/3089	Methanol Feed For Producing Olefin Streams	GC0001688	12/09/2011	12/12/2023	95
63	GCC/P/2007/9372	High-Density Polyethylene Compositions, Method Of Making The Same, Injection Molded Articles Made Therefrom, And Method Of Making Such Articles	GC0001689	12/09/2011	29/10/2027	96
64	GCC/P/2004/3830	Catalyst Composition For Ethylene Polymerization	GC0001690	12/09/2011	20/09/2024	97
65	GCC/P/2005/5066	Method And Apparatus For Treatment Of A Fluid	GC0001691	11/07/2011	21/08/2025	98
66	GCC/P/2006/6747	Process For The Removal Of Filtercakes In Oil Wells	GC0001692	16/07/2011	07/08/2026	99
67	GCC/P/2003/2711	Method For Treating Subterranean Formation	GC0001693	11/07/2011	10/06/2023	100
68	GCC/P/2003/2714	Compositions And Methods For Treating A Subterranean Formation	GC0001694	11/07/2011	14/06/2023	101
69	GCC/P/2005/5264	Subsea Cryogenic Fluid Transfer System	GC0001695	28/09/2011	14/10/2025	102
70	GCC/P/2005/5050	Films Made From Ethylene Polymer Compositions And Processes For Making Such Polymers And Films	GC0001696	06/10/2011	16/08/2025	103
71	GCC/P/2004/3848	Melt Fracture Reduction	GC0001697	28/09/2011	28/09/2024	104
72	GCC/P/2006/6406	Process For Cleaning Wastewaters From Melamine Plants	GC0001698	12/09/2011	10/06/2026	105
73	GCC/P/2005/5134	Solar Augmented Geothermal Energy	GC0001699	15/09/2011	09/09/2025	106
74	GCC/P/2006/5737	Radiation-Crosslinked Polyolefin Compositions	GC0001700	06/10/2011	28/01/2026	107

Sr	Application No	Title of Invention	Patent No	Date of Grant	Valid Until	Page
75	GCC/P/2001/1529	A Pharmaceutical Composition Comprising A Lipase Inhibitor	GC0001701	11/09/2011	24/07/2021	108
76	GCC/P/2007/8702	Mixture For Recovery Utilization Or Transfer Of Carbon Dioxide	GC0001702	11/09/2011	14/07/2027	109
77	GCC/P/2007/8505	Process For Preparing Unsaturated Hydrocarbons	GC0001703	11/09/2011	12/06/2027	110
78	GCC/P/2006/7230	Transformer Conservator Isolation Valve Tciv	GC0001704	28/09/2011	14/11/2026	111
79	GCC/P/2004/3961	Electronic Certification And Authentication System	GC0001705	14/09/2011	30/10/2024	112
80	GCC/P/2007/8234	Process For The Removal Of Hydrogen Cyanide And Formic Acid From Synthesis Gas	GC0001706	11/09/2011	27/04/2027	113
81	GCC/P/2007/9550	Integrated Process For Preparing Benzene And Ammonia From Aliphatic Hydrocarbons And Nitrogen	GC0001707	11/09/2011	23/11/2027	114
82	GCC/P/2006/5788	Artificial Fibre Of The Monofilament-Type For Use In An Artificial Grass Sport Field As Well As An Artificial Grass Lawn For Sport Fields Provided With Such Artificial Fibres	GC0001708	15/09/2011	06/02/2026	115
83	GCC/P/2007/8675	Cell Death-Inducing Agents	GC0001709	11/09/2011	09/07/2027	116
84	GCC/P/2004/3475	Triarylsilylmethacryloyl-Containing Polymers For Marine Coating Compositions	GC0001710	12/09/2011	17/05/2024	117
85	GCC/P/2004/3427	Method And Plant For The Heat Treatment Of Solids Containing Iron Oxide	GC0001711	28/09/2011	01/05/2024	118
86	GCC/P/2007/9608	Decomposition Of Waste Products Formed In Slurry Catalyst Synthesis	GC0001712	12/09/2011	03/12/2027	119
87	GCC/P/2008/12258	Drag Head Of A Trailing Suction Hopper Dredger And Method For Dredging Using This Drag Head	GC0001713	28/09/2011	25/11/2028	120
88	GCC/P/2006/6454	Device And Method For Changing A Suction Mouth	GC0001714	28/09/2011	19/06/2026	121
89	GCC/P/2006/6660	Stackable Cutlery Element	GC0001715	28/09/2011	25/07/2026	122
90	GCC/P/1999/192	Packaging Of Smoking Articles	GC0001716	11/09/2011	25/06/2019	123
91	GCC/P/2002/2108	A Building Panel And Panel Crimping Machine	GC0001717	14/09/2011	28/06/2022	124
92	GCC/P/2003/2453	New Hetrocyclic Compounds, Which Are Active As Inhibitors Of Beta-Lactamases	GC0001718	11/09/2011	20/01/2023	125
93	GCC/P/2004/3574	Reforming Process	GC0001719	28/09/2011	21/06/2024	126

Sr	Application No	Title of Invention	Patent No	Date of Grant	Valid Until	Page
94	GCC/P/2005/4529	Supported Catalyst For Steam Methane Reforming And Auto-thermal Reforming Reactions	GC0001720	11/09/2011	08/04/2025	127
95	GCC/P/2005/4860	Apparatus And Method For Characterizing A Reservoir	GC0001721	14/09/2011	28/06/2025	128
96	GCC/P/2006/5895	Process For Synthesis Gas Production	GC0001722	11/09/2011	28/02/2026	129
97	GCC/P/2006/6255	Improved Hammer Mounting	GC0001723	28/09/2011	14/05/2026	130
98	GCC/P/2006/6537	Process For The Conversion Of Synthesis Gas To Oxygenates	GC0001724	11/09/2011	04/07/2026	131
99	GCC/P/2006/7261	Multi-Compartmental Gabion Can Be Folded	GC0001725	28/09/2011	21/11/2026	132
100	GCC/P/2007/8035	Antibodies	GC0001726	11/09/2011	30/03/2027	133
101	GCC/P/2007/8043	Method For Making A Transition Between Polymer Grades	GC0001727	11/09/2011	30/03/2027	134
102	GCC/P/2007/8044	Process For The Preparation Of Ethylene Polymers Using A Number Of Reactors Arranged In Series	GC0001728	11/09/2011	30/03/2027	135
103	GCC/P/2007/8045	Process To Kill A Catalyzed Olefin Polymerization	GC0001729	11/09/2011	30/03/2027	136
104	GCC/P/2007/8061	Process For Improving The Polymerization Of Ethylene And One Or More Optional Comonomers In A Polymerization Loop Reactor	GC0001730	11/09/2011	01/04/2027	137
105	GCC/P/2007/8283	Isothermal Reactor	GC0001731	11/09/2011	07/05/2027	138
106	GCC/P/2007/8441	Fabric, In Particular For Textile Structures And/Or Coverings	GC0001732	11/09/2011	04/06/2027	139
107	GCC/P/2007/8447	Dual Riser Fcc Reactor Process With Light And Mixed Light/ Heavy Feeds	GC0001733	11/09/2011	05/06/2027	140
108	GCC/P/2007/8704	Process For Preparing Alkyl Mercaptans In A Multizone Fixed Bed Reactor	GC0001734	11/09/2011	13/07/2027	141
109	GCC/P/2007/8755	Method For Analyzing Data Having Shared And Distinct Properties	GC0001735	14/09/2011	22/07/2027	142
110	GCC/P/2007/9430	Phosphite Composition And Method For Producing The Same	GC0001736	11/09/2011	06/11/2027	143
111	GCC/P/2006/7176	Corrosion Inhibition	GC0001737	15/06/2011	07/11/2026	144
112	GCC/P/2005/5594	Process For The Manufacture Of 1,2-Dichloroethane	GC0001738	11/09/2011	20/12/2025	145
113	GCC/P/2005/5595	Process For The Manufacture Of 1,2-Dichloroethane	GC0001739	11/09/2011	20/12/2025	146
114	GCC/P/2005/5596	Process For The Manufacture Of 1,2-Dichloroethane	GC0001740	11/09/2011	20/12/2025	147

Sr	Application No	Title of Invention	Patent No	Date of Grant	Valid Until	Page
115	GCC/P/2006/6301	Corner Fitting For A Cable Trunking System	GC0001741	05/06/2011	22/05/2026	148
116	GCC/P/2005/5572	Method And Installation For Producing Treated Natural Gas, A C3+ Hydrocarbon Cut And An Ethane Rich Stream	GC0001742	11/07/2011	20/12/2025	149
117	GCC/P/2006/7357	Method Of Oil Recovery Using A Foamy Oil-External Emulsion	GC0001743	11/07/2011	08/12/2026	150
118	GCC/P/2006/6981	Multiple Component Feed Methods And Systems	GC0001744	12/09/2011	26/09/2026	151
119	GCC/P/2007/8522	A Process To Produce A Hydrocarbon Rubber Cement Utilizing A Hydrofluorocarbon Diluent	GC0001745	12/09/2011	15/06/2027	152
120	GCC/P/2006/6667	Measurement Of Formation Gas Saturation In Cased Wellbores Using Pulsed Neutron Instrumentation	GC0001746	15/09/2011	25/07/2026	153
121	GCC/P/2006/7541	Coiled Tubing /Top Drvie Rig And Method	GC0001747	11/07/2011	24/12/2026	154
122	GCC/P/2001/1614	Et-Plus : Head Assembly For Guardrail Extruder Terminal	GC0001748	11/07/2011	31/08/2021	155
123	GCC/P/2006/7445	Coiled Tubing Transport System And Method	GC0001749	11/07/2011	17/12/2026	156
124	GCC/P/2007/8562	2-Substituted-Amino-Benzothiazole Sulfonamide Hiv Protease Inhibitors	GC0001750	20/10/2011	19/06/2027	157
125	GCC/P/2007/8579	Apparatus And Method For Measuring Sidewall Thickness Of Non-Round Transparent Containers	GC0001751	28/09/2011	24/06/2027	158
126	GCC/P/2006/7397	Method And Device For Cleaning Of Components Of A Power Generating Plant	GC0001752	28/09/2011	12/12/2026	159
127	GCC/P/2006/6063	Push- Button Switch	GC0001753	11/03/2011	07/04/2026	160
128	GCC/P/2006/6088	Guide Vane Carrier	GC0001754	28/09/2011	09/04/2026	161
129	GCC/P/2005/5512	Cobalt- Based Catalyst For Fischer- Tropsch Synthesis	GC0001755	26/03/2011	13/12/2025	162
130	GCC/P/2004/3423	Apparartus And Method For Repair Of Heat Exchangers, Especially For The Repair Of Heat Exchanger Tub	GC0001756	11/03/2011	30/04/2024	163
131	GCC/P/2001/1205	Method Of Treating Tobacco To Reduce Or Eliminate Nitrosamines	GC0001757	14/09/2011	10/03/2021	164
132	GCC/P/2002/2028	Method To Start A Process For Hydrocarbons	GC0001758	14/09/2011	26/05/2022	165

Sr	Application No	Title of Invention	Patent No	Date of Grant	Valid Until	Page
133	GCC/P/2002/2087	A Process For The Isomerization Of A Vinylidene Olefin	GC0001759	11/09/2011	18/06/2022	166
134	GCC/P/2003/2568	Method And Device For Separating A Mixture Of Fluids	GC0001760	14/09/2011	24/03/2023	167
135	GCC/P/2003/2635	Homogeneous Process For The Hydrogenation Of Carboxylic Acids And/Or Derivatives Thereof	GC0001761	11/09/2011	02/05/2023	168
136	GCC/P/2003/2888	A System And Method For Creation Of Load Units	GC0001762	14/09/2011	08/09/2023	169
137	GCC/P/2003/2894	A Catalyst System	GC0001763	11/09/2011	09/09/2023	170
138	GCC/P/2003/2930	Liquid-Absorbing Polymer, A Process And A Vessel For Its Production	GC0001764	11/09/2011	23/09/2023	171
139	GCC/P/2004/3334	Process For The Preparation Of Poly Silyl Ester S, And Their Uses	GC0001765	11/09/2011	26/03/2024	172
140	GCC/P/2004/3833	Process For Isomerization Of Alpha Olefins And Compositions Resulting Therefrom	GC0001766	28/09/2011	21/09/2024	173
141	GCC/P/2005/4913	Granules Of Powdery Minerals And Method For Production Of Granules	GC0001767	06/10/2011	16/07/2025	174
142	GCC/P/2005/5069	A Particulate Catalyst Comprising An Intimate Mixture Of Cobalt And Aluminium Compounds	GC0001768	06/10/2011	23/08/2025	175
143	GCC/P/2005/5171	A High Activity Hydrodesulfurization Catalyst, A Method Of Making A High Activity Hydrodesulfurization Catalyst, And A Process For Manufacturing An Ultra-Low Sulfur Distillate Product	GC0001769	11/09/2011	16/09/2025	176
144	GCC/P/2006/5778	Method For Purifying Hydrogen Chloride	GC0001770	06/10/2011	06/02/2026	177
145	GCC/P/2006/6061	Catalytic Trimerization And Tetramerization Of Olefinic Monomers	GC0001771	11/09/2011	07/04/2026	178
146	GCC/P/2006/6221	Water-Swellable Hybrid Material With Inorganic Additives And Method Of Producing Same	GC0001772	11/09/2011	05/05/2026	179
147	GCC/P/2006/6724	A Lock And Key System With Improved Tumblers In The Lock	GC0001773	28/09/2011	04/08/2026	180
148	GCC/P/2006/6877	Method For Pressure Testing A Threaded Component	GC0001774	28/09/2011	09/09/2026	181
149	GCC/P/2006/7233	Emulsion Separatory And Breaking Processes	GC0001775	06/10/2011	17/11/2026	182
150	GCC/P/2006/7347	Method To Start A Process For Producing Hydrocarbons From Synthesis Gas	GC0001776	11/09/2011	05/12/2026	183

Sr	Application No	Title of Invention	Patent No	Date of Grant	Valid Until	Page
151	GCC/P/2006/7401	Process For Preparing A Catalyst To Produce Hydrocarbons	GC0001777	06/10/2011	12/12/2026	184
152	GCC/P/2007/7865	Method And System For Determining Catalyst T Activity	GC0001778	14/09/2011	02/03/2027	185
153	GCC/P/2007/8335	Process For The Preparation Of An Olefin	GC0001779	11/09/2011	15/05/2027	186
154	GCC/P/2007/8336	Process For The Preparation Of Propylene	GC0001780	11/09/2011	15/05/2027	187
155	GCC/P/2007/8548	Method Of Joining A Pair Of Tubular Ends	GC0001781	11/09/2011	19/06/2027	188
156	GCC/P/2007/9565	System And Processes For Producing Hydrogen And Carbon Dioxide	GC0001782	11/09/2011	27/11/2027	189
157	GCC/P/2007/9717	Process For Hydrotreating A Diesel Fuel Feedstock, Hydrotreating Unit For The Implementation Of The Said Process, And Corresponding Hydrorefining Unit	GC0001783	11/09/2011	11/12/2027	190
158	GCC/P/2007/9722	Dual-Direction Ram-Type Blowout Preventer Seal	GC0001784	28/09/2011	11/12/2027	191
159	GCC/P/2008/12283	Low Shear Gas Mixer	GC0001785	28/09/2011	29/11/2028	192
160	GCC/P/2008/12067	Method And Apparatus For Longitudinal Orientation Of Thermoplastic Film Material	GC0001786	06/10/2011	31/10/2028	193
161	GCC/P/2000/956	A Novel Fluid System Having Controllable Reversible Viscosity	GC0001787	11/09/2011	14/10/2020	194
162	GCC/P/2003/2524	Process For The Production Of An Alkenyl Carboxylate Or An Alkyl Carboxylate	GC0001788	11/09/2011	25/02/2023	195
163	GCC/P/2003/2623	Process For The Production Of Acetic Acid	GC0001789	11/09/2011	28/04/2023	196
164	GCC/P/2004/3185	Oxidation Catalyst And Its Preparation	GC0001790	11/09/2011	24/01/2024	197
165	GCC/P/2004/3643	Catalyst And Process For The Production Of Acetic Acid	GC0001791	11/09/2011	16/07/2024	198
166	GCC/P/2006/7494	Improved Streptococcus Pneumoniae Vaccine	GC0001792	11/09/2011	19/12/2026	199
167	GCC/P/2007/7669	Process For The Production Of Acetic Acid	GC0001793	11/09/2011	26/01/2027	200
168	GCC/P/2007/7670	Process For The Production Of Acetic Acid	GC0001794	11/09/2011	26/01/2027	201
169	GCC/P/2007/7671	Process For The Production Of Acetic Acid	GC0001795	11/09/2011	26/01/2027	202
170	GCC/P/2007/8418	Process For The Conversion Of Synthesis Gas To Oxygenates	GC0001796	11/09/2011	29/05/2027	203

Sr	Application No	Title of Invention	Patent No	Date of Grant	Valid Until	Page
171	GCC/P/2007/8493	Method, Apparatus And Means For Production Of Metals In A Molten Salt Electrolyte	GC0001797	11/09/2011	11/06/2027	204
172	GCC/P/2008/10925	Carbonylation Process For The Production Of Acetic Acid Using Metal-Pincer Ligand Catalysts	GC0001798	11/09/2011	30/05/2028	205
173	GCC/P/2006/7271	A Method For Receiving Fluid From A Natural Gas Pipeline	GC0001799	21/09/2011	25/11/2026	206
174	GCC/P/2002/2105	Tablet Comprising Cetirizine And Pseudoephedrine	GC0001800	11/09/2011	25/06/2022	207
175	GCC/P/2006/6815	Modified Antigen Binding Molcules With Altered Cell Signaling Activity	GC0001801	11/09/2011	25/08/2026	208
176	GCC/P/2007/8588	Process For Continuous Heterogeneously Catalyzed Partial Dehydrogenation Of At Least One Hydrocarbon To Be Dehydrogenated	GC0001802	11/09/2011	25/06/2027	209
177	GCC/P/2006/7290	Foldable Cupboard Fumigatefor Cloths Fumigatin	GC0001803	07/06/2011	27/11/2026	210
178	GCC/P/2000/597	Process For Controlling The Alumina Content Of The Bath In Electrolysis Cells For Aluminum Production	GC0001804	28/09/2011	03/01/2020	211
179	GCC/P/2004/3696	Process And Apparatus For The Production Of Dimethyl Ether	GC0001805	28/09/2011	03/08/2024	212
180	GCC/P/2005/5159	Methods For Visualizing Distances Between Wellbore And Formation Boundaries	GC0001806	14/09/2011	13/09/2025	213
181	GCC/P/2006/6271	High Temperature Completion Plug	GC0001807	28/09/2011	16/05/2026	214
182	GCC/P/2007/7597	Computer-Based Method For While-Drilling Modeling And Visualization Of Layered Subterranean Earth Formations	GC0001808	14/09/2011	12/01/2027	215
183	GCC/P/2004/4157	Blow Molding Resins With Improved Escr	GC0001809	12/09/2011	21/12/2024	216
184	GCC/P/2006/7178	Compound From Angiotensin Receptor And Nepi Used For The Treatment Of High Blood Pressure And Heart Failure	GC0001810	20/10/2011	07/11/2026	217
185	GCC/P/2006/7043	C-8 Lactam Lactone Compounds And Method For Preparing It	GC0001811	20/10/2011	09/10/2026	218
186	GCC/P/2006/6989	Earthquake Resistant Curtain Walls With Suspended Glassed Panels	GC0001812	28/09/2011	26/09/2026	219
187	GCC/P/2004/3530	Polyester Process Using A Pipe Reactor	GC0001813	28/09/2011	04/06/2024	220

Sr	Application No	Title of Invention	Patent No	Date of Grant	Valid Until	Page
188	GCC/P/2004/3520	Extraction Process For Removal Of Impurities From Mother Liquor In The Synthesis Of Carboxylic Acid	GC0001814	28/09/2011	01/06/2024	221
189	GCC/P/2005/5106	Stabilized Soil Structure And Facing Elements For Its Construction	GC0001815	28/09/2011	02/09/2025	222
190	GCC/P/2004/3365	Process For The Production Of An Olefin Oxide	GC0001816	28/09/2011	06/04/2024	223
191	GCC/P/2006/7001	2-Amino-7,8-Dihydro-6h-Pyrido[4,3-D]Pyrimidin-5-Ones	GC0001817	20/10/2011	29/09/2026	224
192	GCC/P/2006/5702	Hydrotreatment Catalyst, Its Method Of Preparation And Its Use	GC0001818	06/10/2011	20/01/2026	225
193	GCC/P/2008/11098	Modular Heavy Transport Vehicle, In Particular A Port Transport Vehicle	GC0001819	28/09/2011	20/06/2028	226
194	GCC/P/2006/7049	Virtual Temperature Measuring Point	GC0001820	28/09/2011	09/10/2026	227
195	GCC/P/2006/5997	Process For Producing A Gas Stream Depleted Of Hydrogen Sulphide	GC0001821	11/07/2011	24/03/2026	228
196	GCC/P/2004/3446	Method and Plant for the Heat Treatment of Solids Containing Iron Oxide	GC0001822	26/06/2011	072024/05/	229
197	GCC/P/2004/3447	Method and Plant for the Heat Treatment of Solids Containing Iron Oxide	GC0001823	26/06/2011	072024/05/	230

The Front Pages of Granted Patents

(19) pATENT OFFICE OF THE COOPERATION COUNCL FOR THE ARAB STATES OF THE GULF

(19) مكتب براءات الاختراع لمجلس التعاون لدول الخليج العربية

[12] **Patent**

[11] Patent No.: GC 0001627 **[45] Date of Publishing the Grant of the Patent: 31/03/2012 17/2012**	**Number of the Decision to Grant the Patent: 11/25824** **Date of the Decision to Grant the Patent: 11/07/2011**
[21] Application No.: GCC/P/2005/5438 **[22] Filing Date: 27/11/2005** **[30] Priority:** **[31] Priority No. [32] Priority date [33] State** **60/633.361 03/12/2004 US** **[72] Inventors: 1- P. Scott Northrop، 2- Eleanor R. Fieler،3- Peter C. Rasmussen، 4- Edward J. Grave** **[73] Owner: ExxonMobil Upstream Research Company, P.O.Box 2189, Houston, Texas 77252-2189, USA** **[74] Agent: Saud M. A. Shawwaf**	**[51] Int. Cl.[8]: F25J 3/00** **[56] Cited Documents:** **- US 5,956,971 A (COLE et al.) 28 September 1999** **- US 5,062,270 A (HAUT et al.) 05 November 1991** **- US 2002/0062735 A1 (LECOMTE et al.) 30 May 2002** **- US 2002/0124594 A1 (ROJEY et al.) 12 September 2002** **Examiner: Ahmed Saleem Al- Hinai**

[54] INTEGRATED ACID GAS AND SOUR GAS REINJECTION PROCESS

[57] Abstract: A method for hydrocarbon processing is provided. In one or more embodiments, the method includes splitting a hydrocarbon stream comprising natural gas and acid gas into a first stream and a second stream. Alternatively, the first stream and second stream may be provided from other sources. The first stream is processed to remove a portion of the acid gas therefrom, thereby producing a third stream comprising the acid gas removed from the first stream and a fourth stream comprising less than 100 ppm of sulfur-containing compounds. The second stream is combined with the third stream to provide a combined stream, which is compressed and reinjected into a subterranean reservoir.

No. of claims: 40 No. of figures: 3

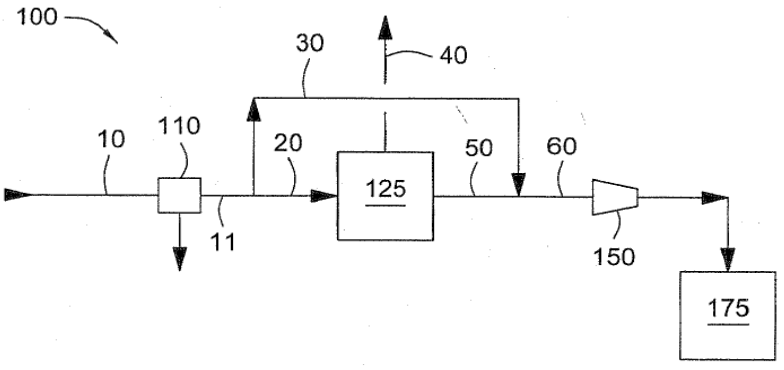

Note: Any interested individual may, within 3 months of publication of the grant, file objection thereof with the Grievance Committee after payment of grievance fees.

(19) pATENT OFFICE OF THE COOPERATION COUNCL FOR THE ARAB STATES OF THE GULF

(19) مكتب براءات الاختراع لمجلس التعاون لدول الخليج العربية

[12] **Patent**

[11] Patent No.: GC0001628 **[45] Date of Publishing the Grant of the Patent: 31/03/2012 17/2012**	**Number of the Decision to Grant the Patent: 11/26633** **Date of the Decision to Grant the Patent: 22/08/2011**
[21] Application No.: GCC/P/2008/11203 **[22] Filing Date: 30/06/2008** **[72] Inventor: Faddaghi Ali Al-Faddaghi** **[73] Owner: Faddaghi Ali Al-Faddaghi**	**[51] Int. Cl.[7]: F04D 17/04, 29/46, 29/28; F25D 17/06** **[56] Cited Documents:** **- US 2007059167 A1 (AMERICAN STANDARD INTERNATIONA INC) 15 March 2007** **- JP 2005330905 A (DAIKIN IND LTD) 02 December 2005** **- JP 206 183975 A (HITACHI LTD) 13 July 2006** **Examiner: Fahad M. al-Baker**

[54] EVAPORATIVE COOLER USING ADVANCED TRAVERSE FAN WITHOUT FAN HOUSING

[57] Abstract: Evaporative cooler with advanced traverse fan without fan housing so that air is gathered and circulated inside the cooler structure without fan housing, i.e. the air rotates and passes through the internal surfaces of the whole structure then exited directly through the traverse fan 6 , see figure (1) and figure (2b) with flexibility in changing the direction of output air, and a system to benefit from the cool water for cooling some internal surfaces.

No. of claims: 11 No. of figures: 12

Note: Any interested individual may, within 3 months of publication of the grant, file objection thereof with the Grievance Committee after payment of grievance fees.

(19) pATENT OFFICE OF THE COOPERATION COUNCL FOR THE ARAB STATES OF THE GULF

(19) مكتب براءات الاختراع لمجلس التعاون لدول الخليج العربية

[12] **Patent**

[11] Patent No.: GC0001629 **[45] Date of Publishing the Grant of the Patent: 31/03/2012 17/2012**	**Number of the Decision to Grant the Patent: 11/25269** **Date of the Decision to Grant the Patent: 26/06/2011**
[21] Application No.: GCC/P/2004/3445 **[22] Filing Date: 08/05/2004** **[30] Priority:** **[31] Priority No. [32] Priority date [33] State** **10260739.7 23/12/2002 DE** **[72] Inventors: 1- Michael Stroder، 2- Martin Hirsch، 3- Werner Stockhausen** **[73] Owner: Outokumpu Oyj, Riihitontuntie 7, FI-02200 Espoo, Finland** **[74] Agent: Saud M. A. Shawwaf**	**[51] Int. Cl.[7]: C01B 13/32; C01F 7/44; B01J 8/38; F23C 10/12** **[56] Cited Documents:** **- US 4795547 A (SHELL OIL COMPANY) 03 January 1989** **Examiner: Abdulaziz S. AL-Motek**

[54] PROCESS AND PLANT FOR PRODUCING METAL OXIDE FROM METAL COMPOUNDS

[57] **Abstract**: **The present invention relates to a process for producing metal oxide from metal com-**
pounds, in particular metal hydroxide or metal carbonate, in which the metal compound is conveyed into a reactor (25) with fluidized bed, heated there to a temperature of 650 to 1150°C by combustion of fuel, and metal oxide is generated, as well as to a corresponding plant. To improve the utilization of energy, it is proposed to introduce a first gas or gas mixture from below through a gas supply tube (26) into a mixing chamber (20) of the reactor (25), the gas supply tube (26) being at least partly surrounded by a stationary annular fluidized bed (27) which is fluidized by supplying fluidizing gas, and to adjust the gas velocities of the first gas or gas mixture and of the fluidizing gas for the annular fluidized bed (27) such that the Particle-Froude numbers in the gas supply tube (26) lie between 1 and 100, in the annular fluidized bed (27) between 0.02 and 2, and in the mixing chamber (20) between 0.3 and 30.

No. of claims: 28 No. of figures: 5

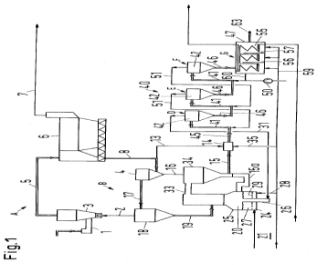

Fig.1

Note: Any interested individual may, within 3 months of publication of the grant, file objection thereof with the Grievance Committee after payment of grievance fees.

(19) pATENT OFFICE OF THE COOPERATION COUNCL FOR THE ARAB STATES OF THE GULF

(19) مكتب براءات الاختراع لمجلس التعاون لدول الخليج العربية

[12] **Patent**

[11] Patent No.: GC0001630 **[45] Date of Publishing the Grant of the Patent: 31/03/2012 17/2012**	**Number of the Decision to Grant the Patent: 11/25271** **Date of the Decision to Grant the Patent: 26/06/2011**
[21] Application No.: GCC/P/2004/3443 **[22] Filing Date: 08/05/2004** **[30] Priority:** **[31] Priority No. [32] Priority date [33] State** **10260741.9 23/12/2002 DE** **[72] Inventors: 1- Werner Stockhausen، 2- Michael Stroder، 3- Dirk Nuber** **[73] Owner: Outokumpu Oyj, Riihitontuntie 7, FI-02200 Espoo, Finland** **[74] Agent: Saud M. A. Shawwaf**	**[51] Int. Cl.[7]: B01J 8/18** **[56] Cited Documents:** **- EP 0630683 A1 (A. AHLSTROM CORPORATION) 28 December 1994** **Examiner: Abdulaziz S. AL-Motek**

[54] METHOD AND PLANT FOR THE HEAT TREATMENT OF FINE-GRAINED SOLIDS

[57] Abstract: The present invention relates to a method for the heat treatment of fine~grained solids, in particular gypsum, in which the solids are heated to a temperature of 50 to 1000°C in a fluidized bed reactor (1), and to a corresponding plant. To improve the energy utilization, it is proposed to introduce a first gas or gas mixture from below through a preferably central gas supply tube (3) into a mixing cham-ber (21) of the reactor (1), the gas supply tube (3) being at least partly sur-rounded by a stationary annular fluidized bed (2) which is fluidized by supplying fluidizing gas, and to adjust the gas velocities of the first gas or gas mixture as well as of the fluidizing gas for the annular fluidized bed (2) such that the particle Froude numbers in the gas supply tube (3) are between 1 and 100, in the annu-lar fluidized bed (2) between 0.02 and 2 and in the mixing chamber (21) be— tween 0.3 and 30.

No. of claims: 22 No. of figures: 2

Note: Any interested individual may, within 3 months of publication of the grant, file objection thereof with the Grievance Committee after payment of grievance fees.

(19) pATENT OFFICE OF THE COOPERATION COUNCL FOR THE ARAB STATES OF THE GULF

(19) مكتب براءات الاختراع لمجلس التعاون لدول الخليج العربية

[12] **Patent**

[11] Patent No.: GC0001631 **[45] Date of Publishing the Grant of the Patent: 31/03/2012 17/2012**	**Number of the Decision to Grant the Patent: 11/24749** **Date of the Decision to Grant the Patent: 15/06/2011**
[21] Application No.: GCC/P/2005/5127 **[22] Filing Date: 07/09/2005** **[72] Inventors: 1- Hiroshi Hachiya، 2- Ichiro Kakihara** **[73] Owner: Asahi Kasei Chemicals Corporation, 1-2, Yurakucho 1-chome, Chiyoda-ku, Tokyo, Japan** **[74] Agent: Nassir Ali Kadasa**	**[51] Int. Cl.[7]: C08G 64/30, 64/04** **[56] Cited Documents:** **- JP200334722A (ASAHI KASEI KOGYO KK) 07 February 2003** **- JP 200334720 A (ASAHI KASEI KOGYO KK) 07 February 2003** **- JP 200348975 A {TEIJIN LTD) 21 February 2003** **Examiner: Ali Ahmed Almulla**

[54] METHOD FOR STABLY PRODUCING AN AROMATIC POLYCARBONATE

[57] Abstract: A method for stably producing an aromatic polycar- bonate, which comprises continuously reacting an aro- matic dihydroxy compound with a diaryl carbonate in a closed, reactor—pipeline system, the closed, reactor —pipeline system comprising: a plurality of reactors which are liguid—tightly connected through a pipeline toward an outlet for a final aromatic polycarbonate product, the pipeline comprising one or more pipes, wherein the plurality of reactors include at least two reactors connected in series, and at least one filter secured in the pipe or pipes of the reactor—pipeline system, wherein the or each filter is simultaneously or separately taken out to the outside of the reactor —pipeline system and subjected to washing in the out- side of the reactor—pipeline system, followed by re-turning of the resultant washed filter into the inside of the pipe or pipes of the reactor—pipeline system, the washing being performed with the below—mentioned washing agents used in the following order: an aqueous solution of a basic compound, an aromatic monohydroxy compound, and a molten mixture of an aromatic dihydroxy compound and a diaryl carbonate, the molten mixture containing a basic compound.

No. of claims: 5 **No. of figures: 1**

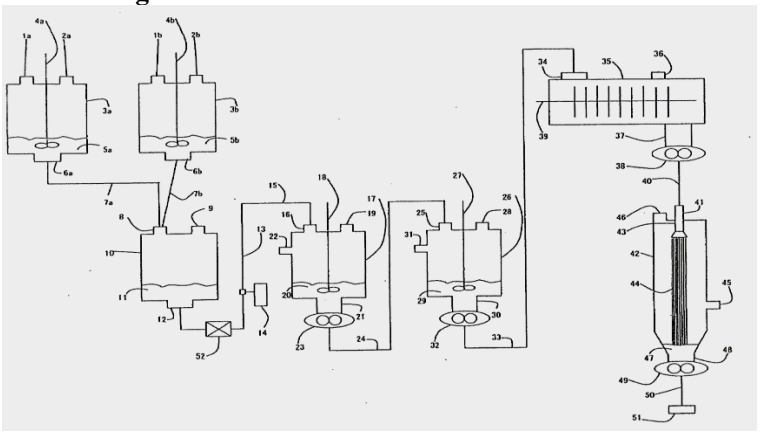

Note: Any interested individual may, within 3 months of publication of the grant, file objection thereof with the Grievance Committee after payment of grievance fees.

(19) pATENT OFFICE OF THE COOPERATION COUNCL FOR THE ARAB STATES OF THE GULF

(19) مكتب براءات الاختراع لمجلس التعاون لدول الخليج العربية

[12] **Patent**

[11] Patent No.: GC0001632 **[45] Date of Publishing the Grant of the Patent: 31/03/2012 17/2012**	**Number of the Decision to Grant the Patent: 11/24745** **Date of the Decision to Grant the Patent: 15/06/2011**
[21] Application No.: GCC/P/2004/3292 **[22] Filing Date: 10/03/2004** **[30] Priority:** **[31] Priority No. [32] Priority date [33] State** **2003/1939 10/03/2003 ZA** **60/453.419 10/03/2003 US** **2003/1937 10/03/2003 ZA** **60/453.418 10/03/2003 US** **2003/6524 21/08/2003 ZA** **60/496.816 21/08/2003 US** **[72] Inventors: 1- Desmet, Mieke Ann، 2- De Wet, Johan Pieter، 3- Jansen, Wilhelmina، 4- Greager, Ivan، 5- Koper, Edward Ludovicus ،6- Scholtz, Jan Hendrik** **[73] Owner: Sasol Technology (Proprietary) Limited, 1 Klaste Havenga Road, Sasolburg, 1947, Free State, South Africa** **[74] Agent: Nassir Ali Kadasa**	**[51] Int. Cl.[7]: C07C 7/10, 2/70; C10G 21/16** **[56] Cited Documents:** **- WO 02/32085 A (SASOL TECHNOLOGY PTY LTD; SCHOLTZ JACOB JOHANNES (ZA); WET JOHAN PETE) 18 April 2002** **- DE 19911910 A (LINDE AG) 21 September 2000** **- US 4686317 A (QUANN RICHARD J et al.) 11 August 1987** **Examiner: Fahed Zoaid AlMutairi**

[54] PRODUCTION OF LINEAR ALKYL BENZENE AND LINER PARAFFIN

[57] Abstract: This invention relates to a process for producing linear alkyl benzene and linear paraffins, the process including the steps of obtaining a hydrocarbon condensate containing olefins, paraffins and oxygenates from a low temperature Fischer-Tropsch reaction; a) fractionating a desired carbon number distribution from the hydrocarbon condensate to form a fractionated hydrocarbon condensate stream; b) extracting oxygenates from the fractionated hydrocarbon condensate stream from step a) to form a stream containing olefins and paraffins; c) alkylating the stream containing olefins and paraffins from step b) with benzene in the presence of a suitable alkylation catalyst; and d) recovering linear alkyl benzene and linear paraffin.

No. of claims: 25 No. of figures: 2

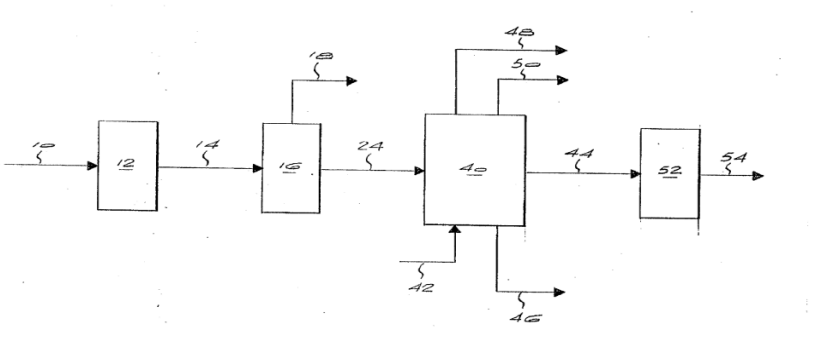

Note: Any interested individual may, within 3 months of publication of the grant, file objection thereof with the Grievance Committee after payment of grievance fees.

(19) pATENT OFFICE OF THE COOPERATION COUNCL FOR THE ARAB STATES OF THE GULF

(19) مكتب براءات الاختراع لمجلس التعاون لدول الخليج العربية

[12] **Patent**

[11] Patent No.: GC0001633 **[45] Date of Publishing the Grant of the Patent: 31/03/2012 17/2012**	**Number of the Decision to Grant the Patent: 11/24518** **Date of the Decision to Grant the Patent: 05/06/2011**
[21] Application No.: GCC/P/2007/7847 **[22] Filing Date: 26/02/2007** **[30] Priority:** **[31] Priority No. [32] Priority date [33] State** **102006011402.7 11/03/2006 DE** **[72] Inventors: 1- Hardy Jungermann، 2- Torsten Hupe، 3- Stephan Volkening** **[73] Owner: Bayer Innovation GmbH, 40225 Düsseldorf , Germany** **[74] Agent: Nassir Ali Kadasa**	**[51] Int. Cl.[7]: G07F 7/08, 7/10** **[56] Cited Documents:** **- US 2005/269410 A1 (WILSON KEVIN [US]) 08 December 2005** **- US 2004/247118 A1 (TATENO KEI [JP] et al) 09 December 2004** **- DE 10037176 A1 (ORGA KARTENSYSTEME GMBH [DE]) 14 February 2002** **- EP 0769758 A2 (NIPPON CONLUX CO LTD [JP]) 23 April 1997** **- EP 0216298 A2 (CASIO COMPUTER CO LTD [JP]) 01 April 1987** **Examiner: Ebrahim Al-Obody**

[54] METHOD AND APPARATUS FOR SAFELY PROCESSING SENSITIVE INFORMATION

[57] Abstract: The subject matter of the invention relates to a system (1) and to a method for the securely processing information, particular sensitive information by means of a signature and/or encryption principle, comprising at least the following: a mobile passive first storage unit (1) for retrievably storing first information, a processing device (3) which is adapted for interacting with the first storage unit (2) in order to process information, comprising: a decryption-protected second storage unit (6) for retrievably storing second information corresponding to the first information, a computer unit (5) for (cryptographically) processing information, an information transmission unit (4) for transmitting the information of the first and/or second storage unit (2, 6) to the computer unit (5).

No. of claims:14 No. of figures:1

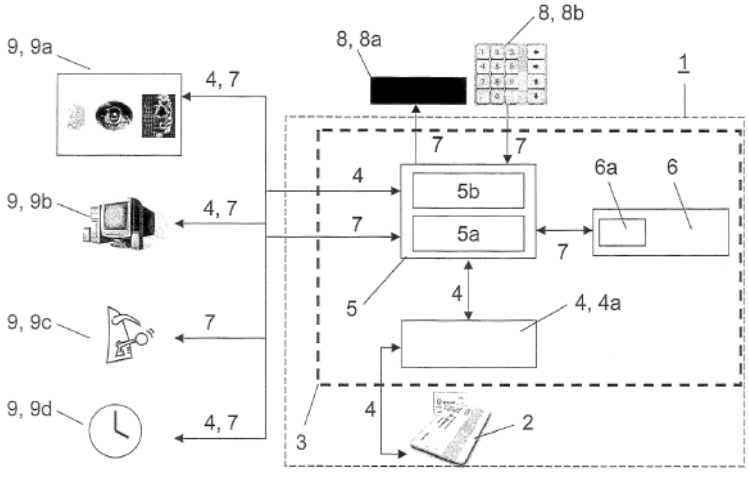

Note: Any interested individual may, within 3 months of publication of the grant, file objection thereof with the Grievance Committee after payment of grievance fees.

(19) pATENT OFFICE OF THE COOPERATION COUNCL FOR THE ARAB STATES OF THE GULF

(19) مكتب براءات الاختراع لمجلس التعاون لدول الخليج العربية

[12] **Patent**

[11] Patent No.: GC0001634 **[45] Date of Publishing the Grant of the Patent: 31/03/2012 17/2012**	**Number of the Decision to Grant the Patent: 11/24381** **Date of the Decision to Grant the Patent: 29/05/2011**
[21] Application No.: GCC/P/2002/2220 **[22] Filing Date: 22/09/2002** **[30] Priority:** **[31] Priority No. [32] Priority date [33] State** **01202439.4 25/06/2001 EP** **GCC/P/2002/2089 19/06/2001 GCC** **[72] Inventors: 1- Winnifred De Graaf، 2- Abdul Razak Mohamad Ali، 3- Thian Hoey Tio** **[73] Owner: Shell Internationale Research Maatschsppij B.V., Carel van Bylandtlaan 30, 2596 HR, The Hauge, The Netherlands** **[74] Agent: Suleiman I. Al-Ammar**	**[51] Int. Cl.[7]: C10G 2/00** **[56] Cited Documents:** **- GB 2183672 A (SHELL INT RESEARCH) 10 June 1987** **- DE 3244252 A (UHDE GMBH) 30 May 1984** **Examiner: Mousa'ab A. AlFadhala**

[54] INTEGRATED PROCESS FOR HYDROCARBON SYNTHESIS

[57] Abstract: The invention relates to a process for producing liquid hydrocarbons from a hydrocarbonaceous feedstock involving: (i) catalytically reforming at least part of the hydrocarbonaceous feedstock at elevated temperature and pressure with steam in at least one reforming zone; (ii) heating the reforming zone(s) by means of a carbon dioxide containing heating gas containing a product obtained by partial oxidation of the reformer product obtained in step (i) and carbon dioxide depleted light product obtained in step (vi) with an oxygen-containing gas in an oxidation zone; (iii) separating carbon dioxide from cooled down heating gas obtained in step (ii); (iv) catalytically converting at least part of the carbon dioxide depleted gas stream obtained in step (iii) at elevated temperature and pressure into normally liquid hydrocarbons; (v) separating product stream obtained in step (iv) into a light product having mainly unconverted synthesis gas, inerts and light hydrocarbons and a heavy product; having mainly normally liquid and solid hydrocarbons; (vi) separating carbon dioxide from the light product obtained in step (v); and (vii) combining at least part of the carbon dioxide feed obtained in step (iii) and/or step (vi) with the hydrocarbonaceous feedstock for step (i).

No. of claims: 10 No. of figures: 1

Note: Any interested individual may, within 3 months of publication of the grant, file objection thereof with the Grievance Committee after payment of grievance fees.

(19) pATENT OFFICE OF THE COOPERATION COUNCL FOR THE ARAB STATES OF THE GULF

(19) مكتب براءات الاختراع لمجلس التعاون لدول الخليج العربية

[12] Patent

[11] Patent No.: GC0001635 **[45] Date of Publishing the Grant of the Patent: 31/03/2012 17/2012**	**Number of the Decision to Grant the Patent: 11/24718** **Date of the Decision to Grant the Patent: 14/06/2011**
[21] Application No.: GCC/P/2005/5597 **[22] Filing Date: 21/12/2005** **[30] Priority:** **[31] Priority No. [32] Priority date [33] State** **0413873 23/12/2004 FR** **0503252 01/04/2005 FR** **0503258 01/04/2005 FR** **[72] Inventors: 1-Dominique Balthasart ، 2- Mr. Michel Strebelle** **[73] Owner: Solvay, 33 Rue Du Prince Albert, 1050 Brussels, Belgium** **[74] Agent: Suleiman I. Al-Ammar**	**[51] Int. Cl.[7]: C07C 17/02, 17/156, 19/045, 21/06, 17/25; C08F 14/06** **[56] Cited Documents:** **- Zimmermann et al.: " Ethylene" Ullmann`S Encyclopedia Of Industrial Chemistry, XX, XX 15 June 2000** **- WO 03/048088 A (BASF AKTIENGESELLSCHAFT; HARTH, KLAUS; SCHINDELR, GOETZ-PETER; WALSDOR) 12 June 20003** **- WO 00/26164 A (SOLVAY; STREBEELE, MICHEL; PETITJEAN, ANDRE) 11 May 2000** **- WO 03/044125 A (CHEVRON PHILIPS CHEMICAL COMPANY LP) 30 May 2003** **- GB 1207767 A (SOLVAY ET CIE) 07 October 1970** **Examiner: Fahed Zoaid AlMutairi**

[54] PROCESS FOR THE MANUFACTURE OF 1,2-DICHLOROETHANE

[57] Abstract: Process for the manufacture of 1,2-dichloroethane starting with a hydrocarbon source according to which:

a) the hydrocarbon source is subjected to a first cracking step, namely a pyrolysis step performed in a cracking oven, thus producing a mixture of cracking products;

b) the said mixture of cracking products is subjected to a succession of treatment steps ending with a drying step which makes it possible to obtain a mixture of products containing ethylene and other constituents;

c) the said mixture of products containing ethylene derived from step b) is separated into at least one fraction containing ethylene and into a heavy fraction;

d) the fraction(s) containing the ethylene is (are) conveyed to a chlorination reactor and/or to an oxychlorination reactor, in which reactors most of the ethylene present is converted to 1,2-dichloroethane;

e) the 1,2-dichloroethane obtained is separated from the streams of products derived from the chlorination and oxychlorination reactors;

the process being characterized in that a step for hydrogenating the acetylene is carried out upstream of the drying step ending the succession of treatment steps constituting step b) and/or on at least one of the fractions containing ethylene after separation during step c).

No. of claims: 13 No. of figures: 1

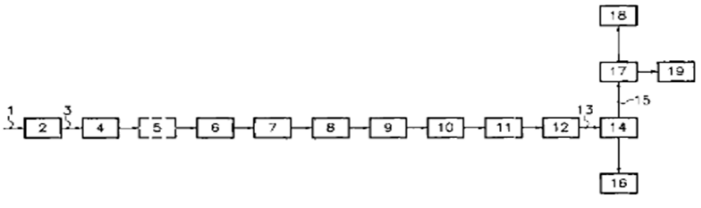

Note: Any interested individual may, within 3 months of publication of the grant, file objection thereof with the Grievance Committee after payment of grievance fees.

(19) pATENT OFFICE OF THE COOPERATION COUNCL FOR THE ARAB STATES OF THE GULF

(19) مكتب براءات الاختراع لمجلس التعاون لدول الخليج العربية

[12] **Patent**

[11] Patent No.: GC0001636 **[45] Date of Publishing the Grant of the Patent: 31/03/2012 17/2012**	**Number of the Decision to Grant the Patent: 11/24365** **Date of the Decision to Grant the Patent: 28/05/2011**
[21] Application No.: GCC/P/2007/7638 **[22] Filing Date: 20/01/2007** **[30] Priority:** **[31] Priority No. [32] Priority date [33] State** **05021997.1 08/10/2005 EP** **7045/7045 08/10/2006 GCCPO** **[72] Inventors: 1- Detlev Haase، 2- Gerhard Schnabel** **[73] Owner: Bayer CropScience GmbH, Bruningstrabe 50, D-65929 Frankfurt, Germany** **[74] Agent: Suleiman I. Al-Ammar**	**[51]Int. Cl. [7]: A01N 43/40** **[56] Cited Documents:** **- WO2005011378 A1 (BAYER CROPSCIENCE GMBH) 10 February 2005** **Examiner: Mousa'ab A. AlFadhala**

[54] OIL SUSPENSION CONCENTRATES COMPRISING DIFLUFENICAN

[57] Abstract: The invention relates to an oil suspension concentrate containing diflufenican, to salts of certain multivalent cations and to formulations embodied in the form of oil suspension concentrates comprising a) diflufenican, b) one or several solvents of hydrocarbon and vegetable oil groups, c) one or several non-surfactant salts of multivalent cations, wherein the product of solubility of said salts in water is greater than that of calcium sulphate, d) one or several surfactants and e) one or several thickeners. The inventive oil suspension concentrate is suitable for plant protection field.

No. of claims: 19

Note: Any interested individual may, within 3 months of publication of the grant, file objection thereof with the Grievance Committee after payment of grievance fees.

(19) pATENT OFFICE OF THE COOPERATION COUNCL FOR THE ARAB STATES OF THE GULF

(19) مكتب براءات الاختراع لمجلس التعاون لدول الخليج العربية

[12] Patent

[11] Patent No.: GC0001637 [45] Date of Publishing the Grant of the Patent: 31/03/2012 17/2012	Number of the Decision to Grant the Patent: 11/24367 Date of the Decision to Grant the Patent: 28/05/2011
[21] Application No.: GCC/P/2007/8000 [22] Filing Date: 26/03/2007 [30] Priority: [31] Priority No. [32] Priority date [33] State 11/390.942 2006/03/18 US [72] Inventor: Bizub, Jeffrey Jacob [73] Owner: Dresser, Inc., 11th floor, Millennium 1, 15455 Dallas Parkway, Texas, Addison, 75001, USA [74] Agent: Suleiman I. Al-Ammar	[51]Int. Cl.[7]: G01N 33/22, 33/28 [56] Cited Documents: - EP0143571A2(MOBIL OIL CORPORATION) 05 June 1985 Examiner: Mousa'ab A. AlFadhala

[54] ANALYSIS OF FUEL COMBUSTION CHARACTERISTICS

[57] Abstract: Some embodiments of a system for determining combustion characteristics may be capable of automatically determining and displaying a plurality of combustion characteristics on a multiple-axis plot. In Such embodiments, a single combustion test in the system`s controlled combustion chamber may provide a user with automatic analysis and display of three, four, five, six, or more combustion characteristics.

No. of claims: 27 No. of figures: 16

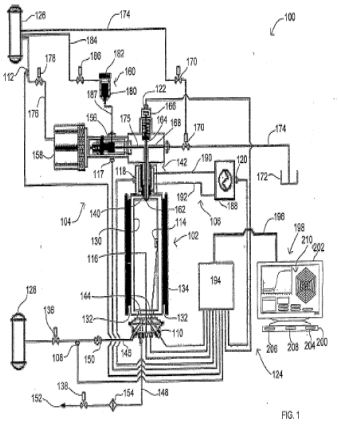

Note: Any interested individual may, within 3 months of publication of the grant, file objection thereof with the Grievance Committee after payment of grievance fees.

(19) pATENT OFFICE OF THE COOPERATION COUNCL FOR THE ARAB STATES OF THE GULF

(19) مكتب براءات الاختراع لمجلس التعاون لدول الخليج العربية

[12] **Patent**

[11] Patent No.: GC0001638 **[45] Date of Publishing the Grant of the Patent: 31/03/2012 17/2012**	**Number of the Decision to Grant the Patent: 11/24427** **Date of the Decision to Grant the Patent: 04/06/2011**
[21] Application No.: GCC/P/2005/4481 **[22] Filing Date: 28/03/2005** **[30] Priority:** **[31] Priority No. [32] Priority date [33] State** **0403497 02/04/2004 FR** **[72] Inventors: 1- Basquin Jean-Luc، 2- Delphine Bonnafous، 3- Claude Vanvoren** **[73] Owner: Aluminium Pechiney,7 , Place du Chancelier Adenauer 75218, Cedex 16 ,Paris , France** **[74] Agent: Suleiman I. Al-Ammar**	**[51] Int. Cl.[7]: C25C 3/16** **[56] Cited Documents:** **- US 2004/050714 A1 (TORVUND JOHNNY) 18 March 2004** **Examiner: Fahad M. al-Baker**

[54] CATHODE ELEMENT FOR USE IN AN ELECTROLYTIC CELL INTENDED FOR PRODUCTION OF ALUMINIUM

[57] Abstract: This invention relates to a cathode element, for use in a pot of an electrolytic cell intended for production of aluminum, comprising a cathode block (5) made of a carbonaceous material with at least a longitudinal groove along one of its side faces and a steel connection bar(6) , that is housed in the said groove such that a part of the bar emerges at one end of the block, is sealed in the groove by insertion of a conducting sealing material between the bar and the block and that includes at least one metal insert, whose electrical conductivity is greater than the electrical conductivity of the said steel. According to the invention, the insert (16) is arranged longitudinally inside the bar and is at least partly located in the segment (19) of the connection bar that is to be located outside the pot and the connection bar (6) is not sealed to the cathode block in a unsealed zone (17) with a determined surface area S located at the end of the groove at the head of the block. The presence of an insert according to the invention can simultaneously result in a very large drop in the global cathode voltage and a very strong reduction in the current density at the head of the block

No. of claims: 8 No. of figures: 18

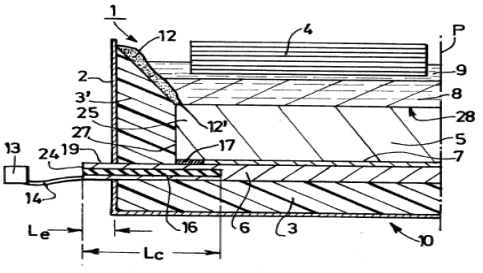

Note: Any interested individual may, within 3 months of publication of the grant, file objection thereof with the Grievance Committee after payment of grievance fees.

(19) pATENT OFFICE OF THE COOPERATION COUNCL FOR THE ARAB STATES OF THE GULF

(19) مكتب براءات الاختراع لمجلس التعاون لدول الخليج العربية

[12] **Patent**

[11] Patent No.: GC0001639 **[45] Date of Publishing the Grant of the Patent: 31/03/2012 17/2012**	**Number of the Decision to Grant the Patent: 11/24447** **Date of the Decision to Grant the Patent: 04/06/2011**
[21] Application No.: GCC/P/2005/5184 **[22] Filing Date: 20/09/2005** **[30] Priority:** **[31] Priority No. [32] Priority date [33] State** **04405607.5 23/09/2004 EP** **[72] Inventors: 1- Haab, Gregor، 2- Odermatt, Marco، 3- Wuthrich, Hans** **[73] Owner: Hawa AG,Untere Fischbachstrasse 4,8932 , Switzerland ,Mettmenstetten** **[74] Agent: Suleiman I. Al-Ammar**	**[51] Int. Cl.[7]: E05F 15/14; E05D 15/06** **[56] Cited Documents:** **- WO 2004/005656 A (HAWA AG; HAAB, GREGOR; FUEGLISTALLER, CORNEL; WUETHRICH, HANS) 15 January 2004** **Examiner: Fahad M. al-Baker**

[54] DRIVE APPARATUS FOR A SLIDABLE DIVIDER ELEMENT, DRIVE ASSEMBLY AND DIVIDER ELEMENT

[57] Abstract: The apparatus for driving a divider element (3) which is slidable linearly and/or in curves, and being optionally rotatable and parkable, comprises a drive assembly (2) which is guided by two running wheels (211) on a running surface (12) of a rail (1), which drive assembly (2) has a drive shaft (9) driven by an electric motor (43) and a gearing (44), the drive shaft (9) being coupled. by a toothed gear (91) to a toothed belt) connected to the rail (1), and which drive assembly (2) is connectable by a load shaft to the divider element (3). According to the invention, the drive assembly (2) has a traveling assembly unit(21) with a traveling assembly' body (210) in (which the drive shaft (7), emerging vertically downward from. the drive assembly (2), and wheel shafts (212) perpendicular thereto for the 'running wheels (211) are held, and which traveling assembly body has a head. piece (2101) which is detachably connected to a drive unit (22), in which the electric motor (43), and the gearing (44) are arranged such that the drive shaft (9) emerges vertically upward from the drive assembly (2) so as to enable the toothed gear (91) mounted on the drive shaft (9) to engage the toothed belt (51) retained above the running surface (12) of the rail (1).

No. of claims: 10 No. of figures: 18

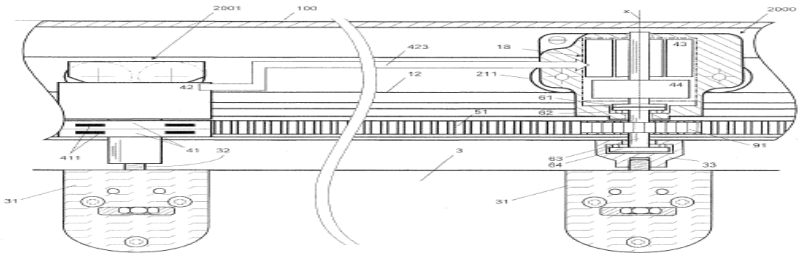

Note: Any interested individual may, within 3 months of publication of the grant, file objection thereof with the Grievance Committee after payment of grievance fees.

(19) pATENT OFFICE OF THE COOPERATION COUNCL FOR THE ARAB STATES OF THE GULF

(19) مكتب براءات الاختراع لمجلس التعاون لدول الخليج العربية

[12] **Patent**

[11] Patent No.: GC0001640 **[45] Date of Publishing the Grant of the Patent: 31/03/2012 17/2012**	**Number of the Decision to Grant the Patent: 11/24453** **Date of the Decision to Grant the Patent: 04/06/2011**
[21] Application No.: GCC/P/2006/7334 **[22] Filing Date: 05/12/2006** **[30] Priority:** **[31] Priority No. [32] Priority date [33] State** **20055865 09/12/2005 NO** **[72] Inventors: 1- Ovstetun, Frank، 2- Kleiva Helge** **[73] Owner: Norsk Hydro ASA, N-0240, Oslo, Norway** **[74] Agent: Suleiman I. Al-Ammar**	**[51] Int. Cl.[7]: C25C 3/22, 7/06, 3/00, 7/00** **[56] Cited Documents:** **- US 4043892 A (JUAN M. GONZALEZ et al.) 23 August 1977** **- US 4202753 A (DONALD R. BRADFORD et al.) 13 May 1980** **- DE 2263348 A1 (SIEMAG TRANSLIFT GMBH) 04 July 1974** **Examiner: Ebrahim Al-Obody**

[54] METHOD AND MEANS FOR OPERATING AN ELECTROLYSIS CELL

[57] Abstract: The present invention concerns a method and device in connection with an electrolytic cell of the hall-heroult type for the production of aluminium. The method relates to the handling of covers in a superstructure in an electrolytic cell, whereby the cell comprises one or more removable covers mounted side by side. Such covers are removed in connection with operations on the cell and are put back into position when the operations have been completed.; In connection with the method in accordance with the present invention, the covers are removed by the total sideways extent of the covers being reduced by the covers being moved together sideways before they are lifted off.; The device in accordance with the present invention relates to covering the electrolytic cell, whereby at least one cover is designed with at least one side edge that overlaps an adjacent fixed or movable cover and is mounted with a mutual sideways clearance from the fixed or movable cover stated to allow a certain mutual sideways movement between the covers.

No. of claims:12 No. of figures:4

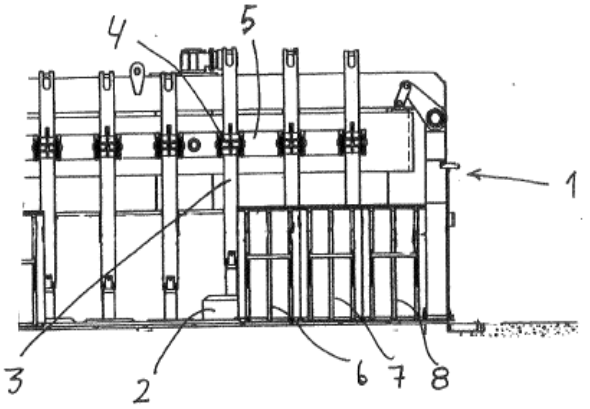

Note: Any interested individual may, within 3 months of publication of the grant, file objection thereof with the Grievance Committee after payment of grievance fees.

[12] Patent

[11] Patent No.: GC0001641 **[45] Date of Publishing the Grant of the Patent: 31/03/2012 17/2012**	**Number of the Decision to Grant the Patent: 11/24462** **Date of the Decision to Grant the Patent: 04/06/2011**
[21] Application No.: GCC/P/2006/7406 **[22] Filing Date: 13/12/2006** **[30] Priority:** **[31] Priority No. [32] Priority date [33] State** **11/304,967 14/12/2005 US** **[72] Inventor: Fahad Al-Wehebi** **[73] Owner: Saudi Arabian Oil Company, Aramco, 31311 , Dharan ,KSA** **[74] Agent: Suleiman I. Al-Ammar**	**[51] Int. Cl.[7]:G01N 27/26** **[56] Cited Documents:** **- WO 00/13010 A (FASANO) 09 March 2000** **- GB 1277392 A (ROYDS-JONES) 14 June 1972** **Examiner: Fahad M. al-Baker**

[54] GAS ALARM SYSTEM WITH WIND DIRECTION INDICATOR

[57] Abstract: A hazardous gases and wind direction sensor includes a housing having a hazardous gas sensor. The gas sensor sends an output signal to a transmitter at a predetermined frequency upon detecting a hazardous gas. Wind detection is provided by eight LEDs aligned with eight corresponding photocells disposed in the housing, where each photocell represents a topographical direction and is adapted to provide an output signal associated with a particular wind direction at a predetermined frequency. A disk is coupled to a rotatable shaft in the housing and positioned between the LEDs and photocells. The shaft is coupled to a wind direction indicator such as a windsock. The disk has a slot sized to allow light to pass from one of the LEDs to its corresponding photocell, which sends an output signal to enable a switching circuit in the transmitter. The switching circuit enables the output signal at a. predetermined frequency to be transmitted to a receiver.

No. of claims: 22 No. of figures: 6

Note: Any interested individual may, within 3 months of publication of the grant, file objection thereof with the Grievance Committee after payment of grievance fees.

(19) pATENT OFFICE OF THE COOPERATION COUNCL FOR THE ARAB STATES OF THE GULF

(19) مكتب براءات الاختراع لمجلس التعاون لدول الخليج العربية

[12] Patent

[11] Patent No.: GC0001642 **[45] Date of Publishing the Grant of the Patent: 31/03/2012 17/2012**	**Number of the Decision to Grant the Patent: 11/24444** **Date of the Decision to Grant the Patent: 04/06/2011**
[21] Application No.: GCC/P/2007/8952 **[22] Filing Date: 25/08/2007** **[30] Priority:** **[31]Priority No. [32] Priority date [33] State** **60/823328 23/08/2006 US** **[72] Inventor: Peter Rothschild** **[73] Owner: American Science and Engineering, Inc., 829 Middlesex Turnpike, Billerica, Massachusetts 01821 , USA** **[74] Agent: Suleiman I. Al-Ammar**	**[51] Int. Cl.[7]: G01N 23/20** **[56] Cited Documents:** **- US 5930326 A (ROTHSCHILD PETER [US] et al.) 27 July 1999** **- US 5696806 A (GRODZINS LEE [US] et al.) 09 December 1997** **xaminer: Ebrahim Al-Obody**

[54] Scatter Attenuation Tomography

[57] Abstract: Methods for characterizing an inspected object on the basis of attenuation determined from pair- wise illuminated voxels. A beam of penetrating radiation characterized by a propagation direction and an energy distribution is scanned across an object, while scatter detectors with collimated fields-of-view detect radiation scattered by each voxel of the inspected object that is intercepted by the incident beam of penetrating radiation. By calculating the attenuation of penetrating radiation between pairs of voxels of incidence of the incident beam, a tomographic image is obtained characterizing the three-dimensional distribution of attenuation in the object of one or more energies of penetrating radiation, and thus of various material characteristics.

No. of claims:14 No. of figures:9

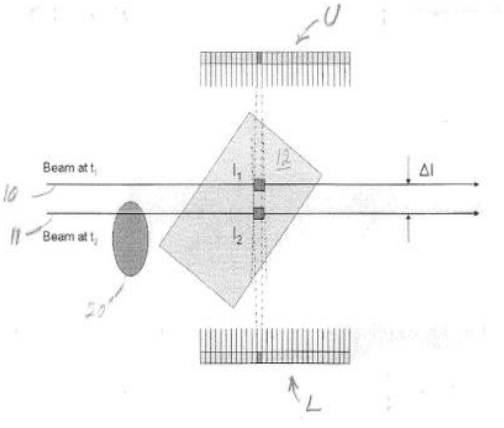

Note: Any interested individual may, within 3 months of publication of the grant, file objection thereof with the Grievance Committee after payment of grievance fees.

(19) pATENT OFFICE OF THE COOPERATION COUNCL FOR THE ARAB STATES OF THE GULF

(19) مكتب براءات الاختراع لمجلس التعاون لدول الخليج العربية

[12] Patent

[11] Patent No.: GC0001643 [45] Date of Publishing the Grant of the Patent: 31/03/2012 17/2012	Number of the Decision to Grant the Patent: 11/24846 Date of the Decision to Grant the Patent: 16/06/2011
[21] Application No.: GCC/P/2005/4435 [22] Filing Date: 19/03/2005 [30] Priority: [31] Priority No. [32] Priority date [33] State 60/553.906 17/03/2004 US [72] Inventors: 1- James C. Stevens، 2- Timothy T. Wenzel، 3- David D. Devore، 4- Colin L. Lipishan، 5- Gordon R. Roof، 6- Edmund M Carnahan، 7- Roger L. Kohlman، 8- Benjamin C. Poon، 9- Yunwa W. Cheung، 10- Daniel J. Arriola،1 1- Phillip D. Hustad، 12- David D. Graf، 13- Pamela J. Stirn [73] Owner: Dow Global Technologies Inc., Washington Street, Building 1790, Midland, 48674, Michigan, USA [74] Agent: Saud M. A. Shawwaf	[51] Int. Cl.[7]: C08F 297/08, 4/646, 2/38 [56] Cited Documents: - WO 03/022890 A (EXXONMOBIL CHEMICAL PATENTS INC; MINK, ROBERT, I; NOWLIN, THOMAS, E; S) 20 March 2003 Examiner: Yahiya Naser Al-BuSafi

[54] CATALYST COMPOSITION COMPRISING SHUTTLING AGENT FOR ETHYLENE MULTI-BLOCK COPOLYMER FORMATION

[57] Abstract: A composition for use in forming a multi-block copolymer, said copolymer containing therein two or more segments or blocks differing in chemical or physical properties, a polymerization process using the same, and the resulting polymers, wherein the composition comprises the admixture or reaction product resulting from combining:

(A) a first metal complex olefin polymerization catalyst,

(B) a second metal complex olefin polymerization catalyst capable of preparing polymers differing in chemical or physical properties from the polymer prepared by catalyst (A) under equivalent polymerization conditions, and

(C) a chain shuttling agent.

No. of claims: 21 No. of figures: 55

Note: Any interested individual may, within 3 months of publication of the grant, file objection thereof with the Grievance Committee after payment of grievance fees.

(19) pATENT OFFICE OF THE COOPERATION COUNCL FOR THE ARAB STATES OF THE GULF

(19) مكتب براءات الاختراع لمجلس التعاون لدول الخليج العربية

[12] **Patent**

[11] Patent No.: GC0001644 **[45] Date of Publishing the Grant of the Patent: 31/03/2012 17/2012**	**Number of the Decision to Grant the Patent: 11/24844** **Date of the Decision to Grant the Patent: 16/06/2011**
[21] Application No.: GCC/P/2005/4437 **[22] Filing Date: 19/03/2005** **[30] Priority:** **[31] Priority No. [32] Priority date [33] State** **60/553,906 17/03/2004 US** **[72] Inventors: 1- Roger L. Kohlman، 2- Phillip D. Hustad، 3- timothy T. wenzel، 4- David D. Devore، 5- Daniel J. Arriola، 6- Edmund M Carnahan** **[73] Owner: Dow Global Technologies Inc., Washington Street, Building 1790, Midland, 48674, Michigan, USA** **[74] Agent: Saud M. A. Shawwaf**	**[51] Int. Cl.[7]: C08F 297/08, 4/646, 2/38** **[56] Cited Documents:** **- EP 0763553 A (MITSUI PETROCHEMICAL INDUSTRIES, LTD; MITSUI CHIMICALS, INC) 19 March 1997** **- US 2004/044154 A1 (KUO CHI-I et al) 4 March 2004** **- WO 03/022890 A (EXXONMOBIL CHEMICAL PATENTS INC; MINK, ROBERT, I; NOWLIN, THOMAS, E; S) 20 March 2003** **Examiner: Yahiya Naser Al-BuSafi**

[54] CATALYST COMPOSITION COMPRISING SHUTTLING AGENT FOR HIGHER OLEFIN MULTI-BLOCK COPOLYMER FORMATION

[57] Abstract: Copolymers, especially multi-block copolymer containing therein two or more segments or blocks differing in chemical or physical properties, are prepared by polymerizing propylene, 4-methyl-1-pentene, or other C_{4-8} α-olefin and one or more copolymerizable comonomers, especially ethylene in the presence of a composition comprising the admixture or reaction product resulting from combining:

(A) a first metal complex olefin polymerization catalyst,

(B) a second metal complex olefin polymerization catalyst capable of preparing polymers differing in chemical or physical properties from the polymer prepared by catalyst (A) under equivalent polymerization conditions, and

(C) a chain shuttling agent.

No. of claims: 21 No. of figures: 6

Note: Any interested individual may, within 3 months of publication of the grant, file objection thereof with the Grievance Committee after payment of grievance fees.

(19) pATENT OFFICE OF THE COOPERATION COUNCL FOR THE ARAB STATES OF THE GULF

(19) مكتب براءات الاختراع لمجلس التعاون لدول الخليج العربية

[12] Patent

[11] Patent No.: GC0001645 **[45] Date of Publishing the Grant of the Patent: 31/03/2012 17/2012**	**Number of the Decision to Grant the Patent: 11/24450** **Date of the Decision to Grant the Patent: 04/06/2011**
[21] Application No.: GCC/P/2006/5656 **[22] Filing Date: 04/01/2006** **[30] Priority:** **[31] Priority No. [32] Priority date [33] State** **05250044.4 07/01/2005 EP** **[72] Inventor: Paul Dirk Schilte** **[73] Owner: Shell Internationale Research Maatschappij B. V.,Carel van Bylandtlaan 30, 2596 HR,The Hague, The Netherlands** **[74] Agent: Suleiman I. Al-Ammar**	**[51] Int. Cl.[7]: E21B 43/10** **[56] Cited Documents:** **- US 2004/154808 A1 (SIMPSON NEIL ANDREW ABERCROMBIE et al.) 12 August 2004** **Examiner: Mohammed A. Aljaffar**

[54] METHOD OF EXPANDING A TUBULAR ELEMENT IN A WELLBORE

[57] Abstract: A method is provided of radially expanding a tubular element (26) extending into a wellbore formed in an earth formation, comprising the steps of arranging an expander (32) in the tubular element, the expander being operable to exert a radial force to the inner surface of the tubular element, and radially expanding the tubular element by pressurizing the interior of the tubular element and simultaneously operating the expander to exert said radial force to the inner surface of the tubular element. The expander is operated to exert said radial force to the inner surface of the tubular element independently from pressurising the interior of the tubular element.

No. of claims: 15 No. of figures: 2

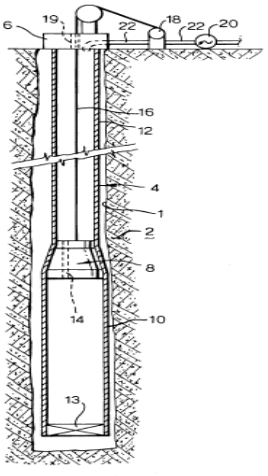

Note: Any interested individual may, within 3 months of publication of the grant, file objection thereof with the Grievance Committee after payment of grievance fees.

(19) pATENT OFFICE OF THE COOPERATION COUNCL FOR THE ARAB STATES OF THE GULF

(19) مكتب براءات الاختراع لمجلس التعاون لدول الخليج العربية

[12] **Patent**

[11] Patent No.: GC0001646 **[45] Date of Publishing the Grant of the Patent: 31/03/2012 17/2012**	**Number of the Decision to Grant the Patent: 11/25816** **Date of the Decision to Grant the Patent: 11/07/2011**
[21] Application No.: GCC/P/2003/2771 **[22] Filing Date: 12/07/2003** **[30] Priority:** **[31] Priority No. [32] Priority date [33] State** **0216277.4 12/07/2002 GB** **[72] Inventors: 1- Ralph Edmund Harris، 2- Ian Donald Mckay** **[73] Owner: Cleansorp Limited,Occam Road,surrey Research Park,Guildford 40, 2GU YG7,Surrey ,Uunited Kingdom** **[74] Agent: Saud M. A. Shawwaf**	**[51] Int. Cl.[7]: E21B 43, C09K 8** **[56] Cited Documents:** **- WO 0102698 A (HARRI RALPH EDMUND ;CLEANSORB LTD (GB); MCKAY IAN DONALD (GB)) 11 January 2001** **- WO 0057022 A (HARRIS RALPH EDMUND ;CLEANSORB LTD (GB); MCKAY IAN DONALD (GB)) 28 September 2000** **- US 5223159 A (SMITH WILLIAM H et al.) 29 June 1993** **- US 5678632 A (HARRIS RALPH et al.) 21 October 1997** **- US 3630285 A (CLAYTOR EDWIN E JR et al.) 28 December 1971** **Examiner: Ahmed Saleem Al- Hinai**

[54] PROCESS FOR TREATMENT OF UNDERGROUND RESERVOIRS

[57] Abstract: A process for treating an underground reservoir, which process comprises a) introducing into the reservoir separately or together: (i) an ester, and
(ii) a compound containing at least one carboxylae functionality, the
compound being water -soluble and capable of increasing the rate of hydrolysis of the ester;
each of components (i) and (ii) being contained a treatment fluid in which it is dissolved or dispersed in water; and
b) allowing the ester to hydrolyse to produce an organic acid in an amount effective to acidise the underground reservoir.

No. of claims: 44

Note: Any interested individual may, within 3 months of publication of the grant, file objection thereof with the Grievance Committee after payment of grievance fees.

(19) pATENT OFFICE OF THE
COOPERATION COUNCL FOR
THE ARAB STATES OF THE GULF

(19) مكتب براءات الاختراع
لمجلس التعاون لدول الخليج العربية

[12] Patent

[11] Patent No.: GC0001647 **[45] Date of Publishing the Grant of the Patent: 31/03/2012 17/2012**	**Number of the Decision to Grant the Patent: 11/24494** **Date of the Decision to Grant the Patent: 05/06/2011**
[21] Application No.: GCC/P/2006/6359 **[22] Filing Date: 03/06/2006** **[30] Priority:** **[31] Priority No. [32] Priority date [33] State** **2005/0293 06/06/2005 BE** **[72] Inventor: Etienne Clymans** **[73] Owner: Dredging International N.V., 30Scheldedijk ,1025Haven , 2070, Zwijndrecht, Belgium** **[74] Agent: Saud M. A. Shawwaf**	**[51] Int. Cl.[7]: E02F 9/06** **[56] Cited Documents:** **- NL 1011753 C1 (IHC HOLLAND N.V) 10 October 2000** **- US 4033056 A (DEMMERS et al.) 05 July 1977** **Examiner: Fahad M. al-Baker**

[54] APPARATUS WITH FLEXIBLY MOUNTED SPUD CARRIER

[57] Abstract: Apparatus for accommodating a substantially vertical spud of a dredging vessel with a longitudinal direction, comprising a spud carrier which is mounted for limited rotation around a horizontal transverse axis, wherein - at least a first and a second spring means is arranged under bias between vessel and spud in the longitudinal direction for the purpose of absorbing a moment on the spud carrier, which first and second spring means compensate each other in the non-loaded situation of the spud; and - at least one spring means is provided with a tensioning force limiting means for limiting the tension in said spring element from a determined maximum moment on the spud carrier.

No. of claims: 14 No. of figures: 12

Note: Any interested individual may, within 3 months of publication of the grant, file objection thereof with the Grievance Committee after payment of grievance fees.

(19) pATENT OFFICE OF THE COOPERATION COUNCL FOR THE ARAB STATES OF THE GULF

(19) مكتب براءات الاختراع لمجلس التعاون لدول الخليج العربية

[12] **Patent**

[11] Patent No.: GC0001648 **[45] Date of Publishing the Grant of the Patent: 31/03/2012 17/2012**	**Number of the Decision to Grant the Patent: 11/24809** **Date of the Decision to Grant the Patent: 15/06/2011**
[21] Application No.: GCC/P/2005/5009 **[22] Filing Date: 09/08/2005** **[30] Priority:** **[31] Priority No. [32] Priority date [33] State** **235321/2004 12/08/2004 JP** **[72] Inventors: 1- Sadayuki Jitsuhara ، 2- Hidetaka Sawada، 3- Takayuki Watanabe ، 4- Yoshinobu Takaki** **[73] Owner: Xenesys Inc., 20-23, Nisikigaoka 3-Chome, Uozumi-Cho, Akashi-Shi, Hyogo-Ken, JAPAN** **[74] Agent: Saud M. A. Shawwaf**	**[51] Int. Cl.[7]: C02F 1/06, B01D 3/06, 5/00; F01K 9/00** **[56] Cited Documents:** **- US 5622605 A (SIMPSON, GRAY D, et al.) 22 April 1997** **Examiner: Ali Ahmed Almulla**

[54] POWER GENERATION AND DESALINATION SYSTEM

[57] Abstract: A system includes power generation and desalination units. The power generation unit has power cycle of repeating first process of making heat exchange between working fluid and high temperature fluid to vaporize the former for energy conversion into electricity, and second process of making heat exchange between the working fluid utilized for such conversion, and low temperature fluid to condense vapor phase working fluid. The desalination unit has vaporization sections vaporizing seawater heated by a radiation unit and condensation sections utilizing seawater. Water obtained through vaporization is condensed to provide salt-free water. The radiation unit has first section receiving seawater not vaporized, and second section receiving seawater from the condensation section and making heat exchange between seawater and the high temperature fluid subjected to the heat exchange with the working fluid in the power generation unit. The seawaters from the first and second sections are introduced into the vaporization section.

No. of claims: 3 No. of figures: 2

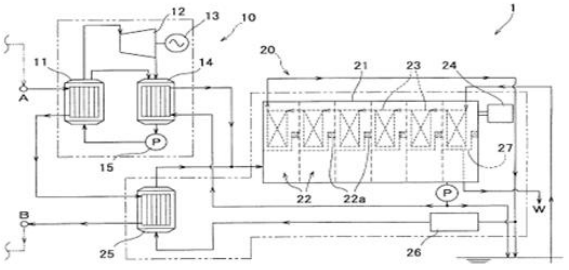

Note: Any interested individual may, within 3 months of publication of the grant, file objection thereof with the Grievance Committee after payment of grievance fees.

(19) pATENT OFFICE OF THE COOPERATION COUNCL FOR THE ARAB STATES OF THE GULF

(19) مكتب براءات الاختراع لمجلس التعاون لدول الخليج العربية

[12] **Patent**

[11] Patent No.: GC0001649 **[45] Date of Publishing the Grant of the Patent: 31/03/2012 17/2012**	**Number of the Decision to Grant the Patent: 11/26900** **Date of the Decision to Grant the Patent: 11/09/2011**
[21] Application No.: GCC/P/2008/11205 **[22] Filing Date: 30/06/2008** **[72] Inventor: Abdullah Manahi Haddaf Alsubaie** **[73] Owner: Abdullah Manahi Haddaf Alsubaie, Jeddah. KSA**	**Int. Cl.[7]: B42B 2/10; B26F 1/32** **[56] Cited Documents:** **- CN1493435 A (MITSUBISHI CORP) 05 May 2004** **- JP 2116500 A (SANDEN CORP) 01 May 1990** **- DE 615987 A1 (BEEHRNS HERBERT) 19 November 1987** **- DE 19644641 A1 (DOBERT BERNHARD) 30 April 1998** **Examiner: Ebrahim Al-Obody**

[54] CALCULATOR STAPLER & PUNCHER WITH DIGITAL CLOCK

[57] Abstract: This is an invented tool consists of paper stapler; puncher, calculator and digital clock manufactured and compacted as a one piece. This invention collects the function of 4 different, independent and important devices into one device. In this invention there is paper puncher provide with sliding road to determine the mid point of the paper before punching. At the bottom of the device there is a drawer pulled out from the front for collecting the remains of the punched papers. Inside the puncher there is a stapler can be used easily, it is installed on the base of the device in a unique shape combined with the puncher in the same base. The device contains also a calculator working with solar energy installed in the middle of the puncher in the hollow region over the stapler, and at the upper part of the calculator there is a digital watch.

No. of claims: 5 No. of figures: 11

FIG (1)

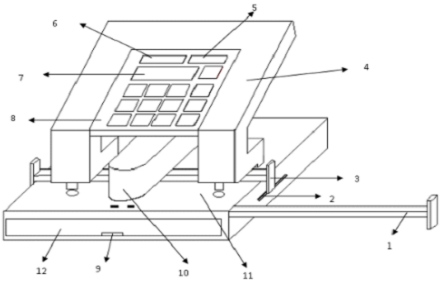

Note: Any interested individual may, within 3 months of publication of the grant, file objection thereof with the Grievance Committee after payment of grievance fees.

(19) pATENT OFFICE OF THE COOPERATION COUNCL FOR THE ARAB STATES OF THE GULF

(19) مكتب براءات الاختراع لمجلس التعاون لدول الخليج العربية

[12] **Patent**

[11] Patent No.: GC0001650 **[45] Date of Publishing the Grant of the Patent: 31/03/2012 17/2012**	**Number of the Decision to Grant the Patent: 11/26902** **Date of the Decision to Grant the Patent: 11/09/2011**
[21] Application No.: GCC/P/2008/11206 **[22] Filing Date: 30/06/2008** **[30] Priority:** **[31] Priority No. [32] Priority date [33] State** **[72] Inventor: Abdullah Manahi Haddaf Alsubaie** **[73] Owner: Abdullah Manahi Haddaf Alsubaie, Jeddah, KSA**	**Int. CI.[7]: A47B 21/00, 41/00, 17/00** **[56] Cited Documents:** **- JP 6296523 A (HIGASHIYAMA, KIYOSHI) 25 October 1994** **- US 5452950 A (CRENSHAW, RALPH E. et al.) 26 September 1995** **- WO 2006/105781 A1 (PAUL GMBH PAEDAGOGISCHE AUSSTATUNGS & L) 21 October 2006** **Examiner: Ebrahim Al-Obody**

[54] COMPACT COMPUTER SCHOOL TABLE

[57] Abstract:Compact computer school table as a one piece is used in general in all educational stages in the daily classrooms instead of the currently used normal tables and the computer labs which dose not meet all the needs of the student, teacher and lesson. When the top surface of the table is closed, it used in writing and other purposes and when the top surface is opened it is used as a personal computer by using a special key or the open is available without the key. This surface can be put in upright position to the back to appear to us the computer screen installed inside it and beside the screen there is a smooth white board size A4, this board is used to write remarks or the important comments and can be erased. At the upper part of the board there is a clip to hold and fix papers to facilitate transfer and write the contents of the fixed paper to the computer. When opening the top surface it appears also the key board and the touch mouse at the lower surface of the table, and also appears the disc drivers in the submersible drawer. At the front there is a longitudinal side drawer compact and fixed with the table and has a rectangular shape from up to down with a door and key for keeping and protecting student belongings from theft or damage. Computer table can be locked firmed by a compact key.

No. of claims: 3 No. of figures: 11

(4) FIG

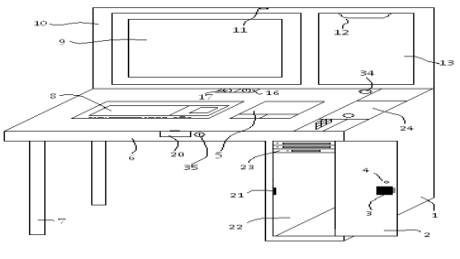

Note: Any interested individual may, within 3 months of publication of the grant, file objection thereof with the Grievance Committee after payment of grievance fees.

(19) pATENT OFFICE OF THE COOPERATION COUNCL FOR THE ARAB STATES OF THE GULF

(19) مكتب براءات الاختراع لمجلس التعاون لدول الخليج العربية

[12] **Patent**

[11] Patent No.: GC0001651 **[45] Date of Publishing the Grant of the Patent: 31/03/2012 17/2012**	**Number of the Decision to Grant the Patent: 11/25820** **Date of the Decision to Grant the Patent: 11/07/2011**
[21] Application No.: GCC/P/2005/5138 **[22] Filing Date: 10/09/2005** **[30] Priority:** **[31] Priority No. [32] Priority date [33] State** **10/938.003 10/09/2004 US** **[72] Inventors: 1- Bruce E. Reynolds، 2- Kaidong Chen** **[73] Owner: Chevron U.S.A. Inc., 555 Market Street, San Francisco, California 94105, USA** **[74] Agent: Saud M. A. Shawwaf**	**[51] Int. Cl.[7]: C10G 65/02, 65/00** **[56] Cited Documents:** **- US 5484755 A (CHEVRON RES & TECH) 16 January 1996** **Examiner: Ahmed Saleem Al- Hinai**

[54] HIGHLY ACTIVE SLURRY CATALYST COMPOSITION

[57] Abstract: The instant invention is directed to the preparation of a slurry catalyst composition. The slurry catalyst composition is prepared in a series of steps, involving mixing a Group VIB metal oxide and aqueous ammonia to form an aqueous mixture and sulfiding the mixture to form a slurry. The slurry is then promoted with a Group VIII metal. Subsequent steps involve mixing the slurry with a hydrocarbon oil, and combining the resulting mixture with hydrogen gas (under conditions which maintain the water in a liquid phase) to produce the active slurry catalyst.

No. of claims:16 No. of figures:1

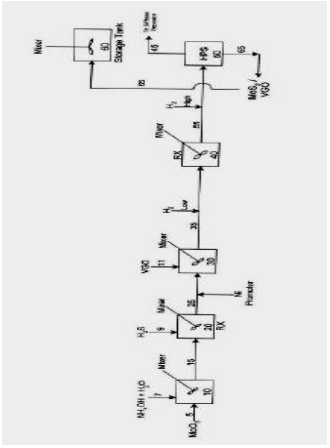

Note: Any interested individual may, within 3 months of publication of the grant, file objection thereof with the Grievance Committee after payment of grievance fees.

(19) pATENT OFFICE OF THE COOPERATION COUNCL FOR THE ARAB STATES OF THE GULF

(19) مكتب براءات الاختراع لمجلس التعاون لدول الخليج العربية

[12] Patent

[11] Patent No.: GC0001652 **[45] Date of Publishing the Grant of the Patent: 31/03/2012 17/2012**	**Number of the Decision to Grant the Patent: 11/25235** **Date of the Decision to Grant the Patent: 26/06/2011**
[21] Application No.: GCC/P/2004/3401 **[22] Filing Date: 20/04/2004** **[30] Priority:** **[31] Priority No. [32] Priority date [33] State** **10/249,573 21/04/2003 US** **[72] Inventors: 1- Murtaza Ziauddin، 2- Wayne Frenier، 3- Frank Chang، 4- Stephen Davies** **[73] Owner: Schlumberger Technology BV, Parkstraat 83-89, 2514 JG , The Hague, The Netherlands** **[74] Agent: Suleiman I. Al-Ammar**	**[51] Int. Cl.[7]: E21B 43/27; C09K 8/04** **[56] Cited Documents:** **- US,A1 ,2002/104657 (WAYNE FRENIER et al.) 08 August 2002** **- WO,A,00/70186 (SCHLUMBBRGER TECHNOLOGY CORP) 23 November 2000** **- WO,A,03/029613 (SCI-ILUMBERGER CA LTD et al.) 10 April 2003** **- US,B1,653l427 (GDANSKI RICK D et al.) 11 March 2003** **- US,A,4090563 (LYBARGER JAMES H et al.) 23.May. 1978** **Examiner: Abdulaziz S. AL-Motek**

[54] COMPOSITON AND METHOD FOR TREATING A SUBTERRANEAN FORMATION

[57] Abstract: An aqueous oilfield treatment fluid containing a chelating agent and an HF source is described. This fluid is effective at dissolving siliceous materials such as clays and keeping the dissolved materials in solution. In particular it is effective at preventing re-precipitation of initia1ly—dissolved silicon as silica and therefore reduces damage to sandstones with which it is contacted. Methods are given for using this fluid for sandstone matrix stimulation, removal of clay-containing drilling fluid components and filter cakes from wellbores, sandstone acid fracturing, and gravel pack and proppant pack cleaning.

No. of claims: 10 No. of figures: 3

Note: Any interested individual may, within 3 months of publication of the grant, file objection thereof with the Grievance Committee after payment of grievance fees.

(19) pATENT OFFICE OF THE COOPERATION COUNCL FOR THE ARAB STATES OF THE GULF

(19) مكتب براءات الاختراع لمجلس التعاون لدول الخليج العربية

[12] **Patent**

[11] Patent No.: GC0001653 **[45] Date of Publishing the Grant of the Patent: 31/03/2012 17/2012**	**Number of the Decision to Grant the Patent: 11/25239** **Date of the Decision to Grant the Patent: 26/06/2011**
[21] Application No.: GCC/P/2004/3528 **[22] Filing Date: 05/06/2004** **[30] Priority:** **[31] Priority No. [32] Priority date [33] State** **10/456.309 06/06/2003 US**	**[51] Int. Cl.[7]: B01J 19/24; C08G 63/78, /81** **[56] Cited Documents:** **- W0 02/46266 A (DEBRUIN BRUCE ROGER ; ' EASTMAN CHEM C0 (83))** **13 June 2002** **- US 6 551 517 B1 (SENTAGNES DOMINIQUE et al.) 22 Apri1 2003** **- US 5 650 536 A (CROSS WILLIAM HARRY et al.) 22 July 1997** **- US 6 399 031 B1 (HERRMANN CHRISYOF et al.) 04 June 2002**
[72] Inventors: 1- Bruce Roger Debruin، 2- Richard Gill Bonner **[73] Owner: Eastman Chemical Company, 100 North Eastman Road, Kingsport, Tennessee 37660, USA** **[74] Agent: Suleiman I. Al-Ammar**	**Examiner: Abdulaziz S. AL-Motek**

[54] POLYESTER PROCESS USING A PIPE REACTOR

[57] Abstract: There are disclosed polyester processes using a pipe reactor and corresponding apparatuses. In particular, there are disclosed processes and corresponding apparatuses including an e sterification pipe reactor o perated in an upflow or downflow mode, especially in a regime including Stratified flow.

No. of claims: 22

Note: Any interested individual may, within 3 months of publication of the grant, file objection thereof with the Grievance Committee after payment of grievance fees.

(19) pATENT OFFICE OF THE COOPERATION COUNCL FOR THE ARAB STATES OF THE GULF

(19) مكتب براءات الاختراع لمجلس التعاون لدول الخليج العربية

[12] **Patent**

[11] Patent No.: GC0001654 **[45] Date of Publishing the Grant of the Patent: 31/03/2012 17/2012**	**Number of the Decision to Grant the Patent: 11/24599** **Date of the Decision to Grant the Patent: 14/06/2011**
[21] Application No.: GCC/P/2000/673 **[22] Filing Date: 27/05/2000** **[30] Priority:** **[31] Priority No. [32] Priority date [33] State** **09/320,327 26/05/1999 US** **[72] Inventors: 1- Rachid Oukaci، 2- Alan H. Singleton، 3- James G. Goodwin** **[73] Owner: Sasog Technology (UK) Limited, Purdie Building North Haugh,ST9 16KY , Andrews,Scotland , United Kingdom** **[74] Agent: Suleiman I. Al-Ammar**	**[51] Int. Cl.[7]: B01J21/04; C07C 1/04** **[56] Cited Documents:** **-US 4619910 A (DYER et al.) 28 October 1986** **- EP 0398420 A2 (SHELL INTERNATIONALE RESEARCH MAATSCHAPPIJ B.V) 22 November 1990** **- US 4670472 A (DYER et al.) 02 June 1987** **Examiner: Bander M. Al-Thobity**

[54] IMPROVED FISCHER-TROPSCH ACTIVITY FOR "NON-PROMOTED" COBALT -ON-ALUMINA CATALYSTS

[57] Abstract: Cobalt catalysts, and processes employing these inventive catalysts, for hydrocarbon synthesis. The inventive catalyst comprises cobalt on an alumina support and is not promoted with any noble or near noble metals. In one aspect of the invention, the alumina support preferably includes a dopant in an amount effective for increasing the activity of the inventive catalyst. The dopant is preferably a titanium dopant.

No. of claims: 23 No. of figures: 2

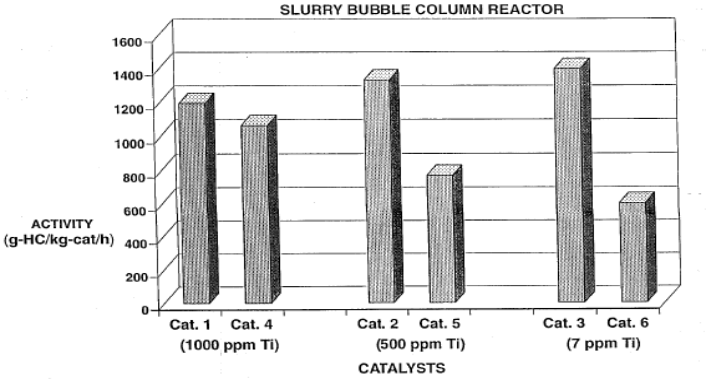

Note: Any interested individual may, within 3 months of publication of the grant, file objection thereof with the Grievance Committee after payment of grievance fees.

(19) pATENT OFFICE OF THE COOPERATION COUNCL FOR THE ARAB STATES OF THE GULF

(19) مكتب براءات الاختراع لمجلس التعاون لدول الخليج العربية

[12] Patent

[11] Patent No.: GC0001655 [45] Date of Publishing the Grant of the Patent: 31/03/2012 17/2012	Number of the Decision to Grant the Patent: 11/24594 Date of the Decision to Grant the Patent: 14/06/2011
[21] Application No.: GCC/P/2003/2422 [22] Filing Date: 01/01/2003 [30] Priority: [31] Priority No. [32] Priority date [33] State 0200021.4 02/01/2002 GB [72] Inventors: 1- Robert William Clarke، 2- Mark Stephen Roberts [73] Owner: BP Chemicals Limited [74] Agent: Suleiman I.AL-Ammar	[51] Int. Cl.[7]: C07C 51/215, 53/08, 67/00, 67/05, 67/54, 69/15, 61/00, 69/01, 51/16, 53/00, 67/00, 69/00; C07B 61/00 [56] Cited Documents: - WO 00/69802 A1 (SAUDI BASIC INDUSTRIES CORPORATI(November 2000 - WO 98/05620 A1 (BP CHEMICALS LIMITED) 12 February 1998 - EP 0985656 A1 (BP CHEMICALS LIMITED) March 2000 Examiner: Bander M. Al-Thobity

[54] INTEGRATED PROCESS FOR THE MANUFACTURE OF ALKENYL CARBOXYLATES

[57] Abstract: An integrated process for the production of an alkenyl carhoxylate, such as vinyl acetate which process comprises the steps of (a) contacting in an oxidation reaction zone a C2 to C4 alkane, such as ethane, a molecular oxygen-containing gas, optionally the corresponding alkene and optionally water, in the presence of a catalyst to produce a stream comprising alkene, carboxylic acid and water; (b) separating at least a portion of the stream from step (a) into a fraction comprising the alkene and a fraction comprising the carboxylic acid and Water;(c) contacting in a second reaction zone at least a portion of said alkene fraction produced in step (b), a carboxylic acid and a molecular oxygen-containing gas, in the presence of a catalyst to produce a product stream comprising an alkeiryl carboxylate, water and carboxylic acid;(d) separating at least a portion of the product stream from step (c) and at least a portion of the carboxylic acid and Water fraction produced in step (b) by azeotropic distillation into an overhead fraction comprising the alkenyl carboxylate and a base fraction comprising the carboxylic acid; (e) recovering the alkenyl carboxylate from the overhead fraction separated in step (d).

No. of claims: 18 No. of figures: 1

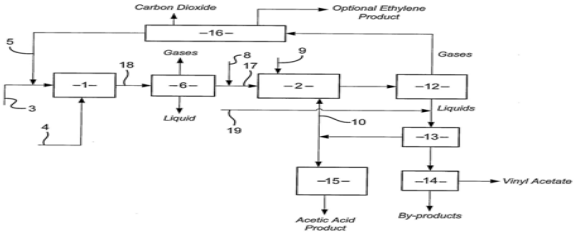

Note: Any interested individual may, within 3 months of publication of the grant, file objection thereof with the Grievance Committee after payment of grievance fees.

(19) pATENT OFFICE OF THE COOPERATION COUNCL FOR THE ARAB STATES OF THE GULF

(19) مكتب براءات الاختراع لمجلس التعاون لدول الخليج العربية

[12] **Patent**

[11] Patent No.: GC0001656 **[45] Date of Publishing the Grant of the Patent: 31/03/2012 17/2012**	**Number of the Decision to Grant the Patent: 11/24724** **Date of the Decision to Grant the Patent: 14/06/2011**
[21] Application No.: GCC/P/2003/2954 **[22] Filing Date: 06/10/2003** **[30] Priority:** **[31] Priority No. [32] Priority date [33] State** **0223681.8 10/10/2002 GB** **[72] Inventor: Brian Ellis** **[73] Owner: Bp Chemicals Limited, Britannic House, 1 Finsbury Circus, EC2M 7BA, London, United Kingdom** **[74] Agent: Suleiman I. Al-Ammar**	**[51] Int. Cl.[7]: B01J 23; C07C 51/25, 51/215** **[56] Cited Documents:** **- EP 1043064 A (BP CHEM INT LTD) 11 October 2000** **- RUTH K et al.: "Mo-V-Nb Oxide Catalysts for the Partial Oxidation of Ethane". J. Catal. 01 April 1998** **- EP 2292987 A (ROHM & HASS) 03 April 2002** **Examiner: Fahed Zoaid AlMutairi**

[54] MIXED METAL OXIDE CATALYST AND PROCESS FOR PRODUCTION OF ACETIC ACID

[57] Abstract: A catalyst composition and its used for the oxidation of ethane and/or ethylene to acetic acid, which composition comprises in combination with oxygen the elements molybdenum, vanadium, niobium and gold in the absence of palladium according to the empirical formula : $Mo_aW_bAu_cV_dNb_eY_f$ (I),

wherein Y is one or more elements selected from the group consisting of : Cr, Mn, Ta, Ti, B, Al, Ga, In, Pt, Zn, Cd, Bi, Ce, Co, Rh, Ir, Cu, Ag, Fe, Ru, Os, K, Rb, Cs, Mg, Ca, Sr, Ba, Zr, Hf, Ni, P, Pb, Sb, Si, Sn, Tl, U, Re, Te and La; and a, b, c, d, e and f represent the gram atom ratios of the elements such that: $0 < a \leq 1$; $0 \leq b < 1$; $a + b = 1$; $10^{-5} < c \leq 0.02$; $0.4 \leq d \leq 0.865$; $0.135 \leq e \leq 0.23$; $0.55 \leq d + e \leq 1$; and $0 \leq f \leq 2$.

No. of claims: 11

Note: Any interested individual may, within 3 months of publication of the grant, file objection thereof with the Grievance Committee after payment of grievance fees.

(19) pATENT OFFICE OF THE COOPERATION COUNCL FOR THE ARAB STATES OF THE GULF

(19) مكتب براءات الاختراع لمجلس التعاون لدول الخليج العربية

[12] **Patent**

[11] Patent No.: GC0001657 **[45] Date of Publishing the Grant of the Patent: 31/03/2012 17/2012**	**Number of the Decision to Grant the Patent: 11/24722** **Date of the Decision to Grant the Patent: 14/06/2011**
[21] Application No.: GCC/P/2004/4001 **[22] Filing Date: 20/11/2004** **[30] Priority:** **[31] Priority No. [32] Priority date [33] State** **10/719,551 20/11/2003 US** **10/742,066 19/12/2003 US** **[72] Inventor: Klein, Darryl, P.** **[73] Owner: Advanced Refining Technologies LLC, 7500 Grace Drive, Columbia, MD 21044, USA** **[74] Agent: Suleiman I. Al-Ammar**	**[51] Int. Cl.[7]: B01J 27/19, 37/02** **[56] Cited Documents:** **- US 4818743 A (SIMPSON et al.) 04 April 1989** **- US 5498586 A (DAI et al.) 12 March 1996** **- EP 0266008 A1 (SHELL INTERNATIOLNALE RESEARCH MAATSCHAPPIJ B.V.) 04 May 1988** **Examiner: Fahed Zoaid AlMutairi**

[54] HYDROCONVERSION CATALYSTS AND METHODS OF MAKING AND USING SAME

[57] Abstract: Stable catalyst carrier impregnating solutions can be prepared using a component of a Group VIB metal, e.g., molybdenum, at high concentration, a component of a Group VIII metal, e.g., nickel, at low concentration, and a phosphorous component, e.g., phosphoric acid, at low concentration, provided that the Group VIII metal *is* in a substantially water-insoluble form and a particular sequence of addition of the components is followed, even when a substantially water-insoluble form of the Group VIE component is used. The resulting stabilized impregnating solution can be supplemented with additional Group VIII metal in water-soluble form to achieve increased
levels of such metal in the final catalyst. Furthermore, uncalcined catalyst carriers impregnated with stable solution and subsequently shaped, dried and calcined, have unexpectedly improved performance when used in the hydroprocessing of heavy
hydrocarbon feedstocks. High conversion can be achieved at reduced levels of sediment, especially *in* comparison to standard commercial catalysts.

No. of claims: 80 **No. of figures: 4**

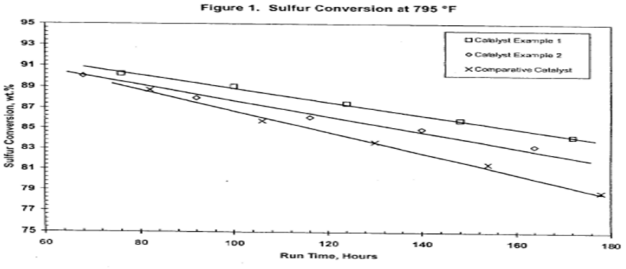

Note: Any interested individual may, within 3 months of publication of the grant, file objection thereof with the Grievance Committee after payment of grievance fees.

(19) pATENT OFFICE OF THE COOPERATION COUNCL FOR THE ARAB STATES OF THE GULF

(19) مكتب براءات الاختراع لمجلس التعاون لدول الخليج العربية

[12] **Patent**

[11] Patent No.: GC0001658 **[45] Date of Publishing the Grant of the Patent: 31/03/2012 17/2012**	**Number of the Decision to Grant the Patent: 11/24676** **Date of the Decision to Grant the Patent: 14/06/2011**
[21] Application No.: GCC/P/2004/4006 **[22] Filing Date: 20/11/2004** **[30] Priority:** **[31] Priority No. [32] Priority date [33] State** **716,232/10 18/11/2003 US** **[72] Inventor: Charles Sumner** **[73] Owner: ABB Lummus Global Inc., 1515 Broad Street, Bloomfield, 07003-3096, New Jersey, USA** **[74] Agent: Suleiman I. Al-Ammar**	**[51] Int. Cl.[7]: C07C 11/04, 11/06, 2/06** **[56] Cited Documents:** **- US 4458096 A (AIR PRODUCTS AND CHEMICALS, INC) 03 July 1984** **Examiner: Yahiya Naser Al-BuSafi**

[54] PRODUCTION OF PROPYLENE FROM STEAM CRACKING OF HYDROCARBONS, PARTICULARLY ETHANE

[57] Abstract: An ethane or other hydrocarbon feedstock is sleam cracked to produce an ethylene stream which is processed in an ethylene plant recovery section to separate an ethane recycle and a polymer grade or chemical grade ethylene product stream. A portion of the ethylene product stream may then be reacted by dimerzation to produce a butene stream. These formed butene and/or butane recovered from other sources and another portion of the ethylene product stream are reacted by metathesis to produce a propylene stream which is deethanized and separated from heavier hydrocarbons to produce the propylene product. The butane product stream may also be deethanized and is separated from heavier hydrocarbons. The overhead from the methaesis section deethanizer may be recycled to the ethylene plant recovery section. The reflux for the methaesis section deethanizer may be generated from the overhead or may be a portion of ethylene product stream.

No. of claims: 25 No. of figures: 6

Note: Any interested individual may, within 3 months of publication of the grant, file objection thereof with the Grievance Committee after payment of grievance fees.

(19) pATENT OFFICE OF THE COOPERATION COUNCL FOR THE ARAB STATES OF THE GULF

(19) مكتب براءات الاختراع لمجلس التعاون لدول الخليج العربية

[12] Patent

[11] Patent No.: GC0001659 [45] Date of Publishing the Grant of the Patent: 31/03/2012 17/2012	Number of the Decision to Grant the Patent: 11/24732 Date of the Decision to Grant the Patent: 15/06/2011
[21] Application No.: GCC/P/2005/4289 [22] Filing Date: 12/02/2005 [30] Priority: [31] Priority No. [32] Priority date [33] State 10353202.1 13/11/2003 DE 3975/3975 02/11/2004 GCC [72] Inventor: Heinz-Werner Kleemann [73] Owner: Aventis Pharma Deutschland GmbH, D-65929, Frankfurt am Main, Germany [74] Agent: Suleiman I. Al-Ammar	[51] Int. Cl.[7]: C07C 381/00; A61K31/166; A61P9/06 [56] Cited Documents: - EP 686627 A (HOECHST) 13 December 1995 Examiner: Nouf Saleh Alnassban

[54] PENTAFLUOROSULFANYLBENZOYLGUANIDINES, PROCESS FOR THEIR PREPARATION, THEIR USE AS MEDICAMENT OR DIAGNOSTIC AID, AND MEDICAMENT COMPRISING THEM

[57] Abstract: Pentafluorosulfanylbenzoylguanidines, process for their preparation, their 5 use as medicament or diagnostic aid, and medicament comprising them

Pentafluorosulfanylbenzoyiguanidines of the formula

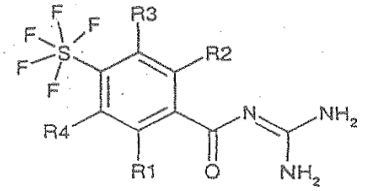

in which RI to R4 have the meanings stated in the claims, are suitable, for example, as antiarrhythmic medicaments with a cardioprotective component for the prophylaxis of infarction and treatment of infarction and for the treatment of angina pectoris.

They also inhibit preventively the pathophysiological processes associated with the development of ischemia-induced damage, especially in the triggering of ischemia-induced cardiac arrhythmias.

No. of claims: 16

Note: Any interested individual may, within 3 months of publication of the grant, file objection thereof with the Grievance Committee after payment of grievance fees.

(19) pATENT OFFICE OF THE COOPERATION COUNCL FOR THE ARAB STATES OF THE GULF

(19) مكتب براءات الاختراع لمجلس التعاون لدول الخليج العربية

[12] **Patent**

[11] Patent No.: GC0001660 **[45] Date of Publishing the Grant of the Patent: 31/03/2012 17/2012**	**Number of the Decision to Grant the Patent: 11/24678** **Date of the Decision to Grant the Patent: 14/06/2011**
[21] Application No.: GCC/P/2005/4427 **[22] Filing Date: 16/03/2005** **[30] Priority:** **[31] Priority No. [32] Priority date [33] State** **0403080 25/03/2004 FR** **[72] Inventors: 1- Alain Van Acker، 2- Patrick Delescluse، 3- Benoit Morel** **[73] Owner: E.C.L., 100 rue Chalant, 59790, Ronchin, France** **[74] Agent: Suleiman I. Al-Ammar**	**[51] Int. Cl.[7]: C25C 3/10, 3/06, 3/14, 7/00** **[56] Cited Documents:** **- NL 8801742 A (B.V. NEDERLANDSE KRAANBOUW MAATSCHAPPIJ NKM) 1 February 1990** **- US 4053384 A (FREDERIK W. SIEGMUND) 11 October 1977** **Examiner: Yahiya Naser Al-BuSafi**

[54] COMPACT SERVICE MODULE FOR USE IN ELECTROLYTIC ALUMINIUM PRODUCTION PLANTS

[57] Abstract: **The invention relates to a tending module (7) for a series of electrolytic cells (2) to be used for the production of aluminium by fused bath electrolysis including a frame (8) that can be fixed to a trolley (6) and a turret (9) fitted on the frame (8) so as to pivot about a vertical axis A, and equipped with a set of tools including a crust breaker (11), a bucket shovel (12), at least one first anode clamp (13) and a hopper (15) fitted with a retractable duct (16), and a balcony or a cab (18) comprising controls that will be used to manoeuvre the module and the said tools and a control station (19) from which an operator can actuate the said controls. The module according to the invention *is* characterised in that, taking a first plane *21* and a second plane P2 perpendicular to each other and to the turret (9) plane Pt and intersecting on the A axis, the centre C of the control station (1-9) is located at a determined distance Cl from plane P1 and a determined distance C2 from plane 92, the centre of the bucket shovel (12) and the centre of the first anode clamp (13) are located on the opposite side of the plane PI from the control station (19), and the crust breaker (11) and the said retractable duct (16) are located between the control station (19) and the row formed by the bucket shovel (12) and the first anode clamp (13).**

No. of claims: 20 **No. of figures: 6**

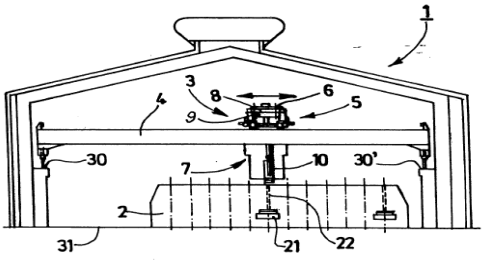

Note: Any interested individual may, within 3 months of publication of the grant, file objection thereof with the Grievance Committee after payment of grievance fees.

(19) pATENT OFFICE OF THE COOPERATION COUNCL FOR THE ARAB STATES OF THE GULF

(19) مكتب براءات الاختراع لمجلس التعاون لدول الخليج العربية

[12] **Patent**

[11] Patent No.: GC0001661 **[45] Date of Publishing the Grant of the Patent: 31/03/2012 17/2012**	**Number of the Decision to Grant the Patent: 11/24728** **Date of the Decision to Grant the Patent: 14/06/2011**
[21] Application No.: GCC/P/2005/4902 **[22] Filing Date: 12/07/2005** **[30] Priority:** **[31] Priority No. [32] Priority date [33] State** **04254169.8 13/07/2004 EP** **[72] Inventors: 1- ARIE VAN ZON، 2- INGE OOSTERVELD، 3- ERIC JOHANNES MARIA DE BOER، 4- HARRY VAN DER HEIJDEN** **[73] Owner: Shell Internationale Research Maatschsppij B.V., Carel van Bylandtlaan 30, 2596 HR, The Hauge, The Netherlands** **[74] Agent: Suleiman I. Al-Ammar**	**[51] Int. Cl.[7]: C07C2/22, 2/08, 1/32, 5/25** **[56] Cited Documents:** **- US 6 291 733 B1 (SMALL BROOKE L et al.) 18 September 2001** **- NO 2004/037415 A (SHELL INTERNATIONALE RESEARCH MAATSCHAPPIJ B.V; DE BOER, ERIC, JOHANNE) 06 May 2004** **- EP 0 505 834 A (ETHYL CORPORATION; ALBEMARLE CORPORATION) 30 September 1992** **Examiner: Ali Ahmed Almulla**

[54] PROCESS FOR PREPARING LINEAR ALPHA OLEFINS

[57] Abstract: Process for preparing linear alpha olefins A process for the preparation of linear alpha olefins having 2n carbon atoms from linear alpha olefins having n carbon atoms comprising the steps of:

(a) dimerizing a linear alpha olefin having n carbon atoms in the presence of a dimerization catalyst to produce a linear. internal olefin having 2n carbon atoms;

(b)(i) reacting the linear internal olefin having - 2n carbon atoms produced in step (a) with a trialkylaluminium compound in the presence of a catalytic amount.of an isomerization/ displacement catalyst in order to cause isomerization of the linear . internal olefin and to displace alkyl . group(s) from said trialkylaluminium compound to form an alkyl aluminium compound

wherein at least one of the alkyl groups I bound to aluminium is a linear alkyi which ~ has been derived irom the isomerization of said linear internal olefin, and

(b){ii) reacting said alkyi aluminium compound with an alpha olefin optionally in the presence of' a displacement catalyst so as to displace said linear alkyl from said alkyl aluminium ~ compound to form a linear alpha olefin having Zn carbon atoms.

No. of claims: 17

Note: Any interested individual may, within 3 months of publication of the grant, file objection thereof with the Grievance Committee after payment of grievance fees.

(19) pATENT OFFICE OF THE COOPERATION COUNCL FOR THE ARAB STATES OF THE GULF

(19) مكتب براءات الاختراع لمجلس التعاون لدول الخليج العربية

[12] **Patent**

[11] Patent No.: GC0001662 **[45] Date of Publishing the Grant of the Patent: 31/03/2012 17/2012**	**Number of the Decision to Grant the Patent: 11/24682** **Date of the Decision to Grant the Patent: 14/06/2011**
[21] Application No.: GCC/P/2005/4927 **[22] Filing Date: 23/07/2005** **[30] Priority:** **[31] Priority No. [32] Priority date [33] State** **60/606,660 02/09/2004 US** **11/018,358 21/12/2004 US** **[72] Inventors: 1- Frederick Leslie Colhoun، 2- Rodney Scott Armentrout، 3- Bruce Roger Debruin، 4- Michael Paul Ekart** **[73] Owners: Eastman Chemical Company, 100 North Eastman Road, Kingsport, Tennessee 37660, USA** **[74] Agent: Suleiman I. Al-Ammar**	**[51]Int. Cl.[7] : C08G 63/02** **[56] Cited Documents:** **- US 5573820 A (Mitsui Petrochemical Industries, Ltd) 12 November 1996** **- WO 03/011940 A1 (Nestle Waters Management & Technology, et al.) 13 February 2003** **Examiner: Yahiya Naser Al-BuSafi**

[54] REMOVAL OF RESIDUAL ACETALDEHYDE FROM POLYSTER POLYMER PARTICLES

[57] Abstract: In one embodiment, there is provided a process comprising introducing polyester polymer particles containing residual acetaldehyde into a vessel at a temperature within a range of 130˚C to 195˚C to form a bed of particles within the vessel, flowing a gas through at least a portion of the particle bed, and withdrawing finished particles from the vessel having a reduce amount of residual acetaldehyde. In this process, it is not necessary to introduce a hot flow of gas at high flow rates otherwise required to heat up cool particles to a temperature sufficient to strip acetaldehyde. Rather, this process provides a benefit in that, if desired, gas introduced into the vessel at low flow rates and low temperatures can nevertheless effectively strip acetaldehyde in a reasonable time because the hot particles quickly heat a the gas to particle temperature.

No. of claims: 43 No. of figures: 3

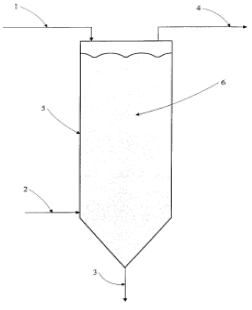

Note: Any interested individual may, within 3 months of publication of the grant, file objection thereof with the Grievance Committee after payment of grievance fees.

(19) pATENT OFFICE OF THE COOPERATION COUNCL FOR THE ARAB STATES OF THE GULF

(19) مكتب براءات الاختراع لمجلس التعاون لدول الخليج العربية

[12] **Patent**

[11] Patent No.: GC0001663 **[45] Date of Publishing the Grant of the Patent: 31/03/2012 17/2012**	**Number of the Decision to Grant the Patent: 11/24720** **Date of the Decision to Grant the Patent: 14/06/201**
[21] Application No.: GCC/P/2005/5522 **[22] Filing Date: 14/12/2005** **[30] Priority:** **[31] Priority No. [32] Priority date [33] State** **0427821.4 17/12/2004 GB**	**[51] Int. Cl.[7]: B01J 23/46, 23/00; C07C 51/12, 53/08** **[56] Cited Documents:** **- US 393219 A (WILKINSON et al.) 17 February 1976** **- US GB 1326014 A (JOHNSON MATTHEY CO LTD) 08 August 1973** **- US 466851 A (DRENT et al.) 12 May 1987** **- GB 2123404 A (SHELL INTERNATIONALE RESEARCH MAATSCHAPPIJ BV) 01 February 1984** **- Hjortkjaer et al.: "Rhodium Complex Catalyzed Methanol Carbonylation Effects of Medium and Various Additives", Industrial and Engineering Chemistry, Product Research and Development, Vol. 16, No.4, 1977, Pages 281-285** **- Smith et al.: "The Rhodium-Catalyzed Methanol Carbonylation to Acetic Acid at Low Water Concentrations: The Effect of Iodide and Acetate on Catalyst Activity and Stability", Journal of Molecular Catalysis, Vol. 39, 1987. Pages 115-136** **- US 6127432 A (WEGMAN et al.) 03 October 2000** **- WO 2005/085162 A)BP CHEMICHALS LIMITED; SMITH, WARREN, JOHN) 15 September 2005** **- WO 2005/009939 A (PB CHEMICHALS LIMITED; HAYNES, ANTONY; LAW, DAVID, JOHN; MILLER, ANDREW) 03 February 2005** **- US 3923880 A (WESTLAKE et al) 2 December 2005** **Examiner: Fahed Zoaid AlMutairi**
[72] Inventors: 1- Miller, Andrew John، 2- MORRIS, George Ernest **[73] Owner: BP Chemicals Limited, Chertsey road, Sunbury-on-Thames, TW 16 7BP, Middlesex, United Kingdom** **[74] Agent: Suleiman I. Al-Ammar**	

[54] PROCESS AND CATALYST FOR THE MANUFACTURE OF ACETIC ACID

[57] Abstract: A process and catalyst for production of acetic acid by the carbonylation of methanol and/or a reactive derivative thereof wherein the catalyst system comprises a rhodium carbonylation catalyst, methyl iodide, a non-hydrohalogenoic acid promoter and optionally a co-promoter capable of generating ionic iodide.

No. of claims: 21

Note: Any interested individual may, within 3 months of publication of the grant, file objection thereof with the Grievance Committee after payment of grievance fees.

(19) pATENT OFFICE OF THE COOPERATION COUNCL FOR THE ARAB STATES OF THE GULF

(19) مكتب براءات الاختراع لمجلس التعاون لدول الخليج العربية

[12] **Patent**

[11] Patent No.: GC0001664 **[45] Date of Publishing the Grant of the Patent: 31/03/2012 17/2012**	**Number of the Decision to Grant the Patent: 11/24712** **Date of the Decision to Grant the Patent: 14/06/2011**
[21] Application No.: GCC/P/2006/5782 **[22] Filing Date: 07/02/2006** **[30] Priority:** **[31] Priority No. [32] Priority date [33] State** **102005005987.2 09/02/2005 DE** **[72] Inventors: 1- Klippert, Heinz، 2- Woike, Ulrich، 3- Kirschner, Jurgen، 4- Kammerhofer, Peter** **[73] Owner: Vinnolit GmbH & Co. KG, Profit-Center VinTec, Werk Gendorf, 84508 Burgirchen, Germany** **[74] Agent: Suleiman I. Al-Ammar**	**Int. Cl.[7]: C08F 2/01, 2/18, 14/06; C08J 11/02** **[56] Cited Documents:** **- GB 849 120 A (PHILLIPS PETROLEUM COMPANY) 21 September 1960** **- US 2002/193455 A1 (SASABE MASAZUMI et al.) 19 December 2002** **- US 6395793 B1 (KADONAGA KENJI et al.) 28 May 2002** **- US 2482056 A (ELWELL WILLIAM E et al.) 13 September 1949** **Examiner: Yahiya Naser Al-BuSafi**

[54] PROCESS FOR THE POLYMERISATION OF VINYL-CONTAINING MONOMERS

[57] Abstract: The invention relates to a process for the polymerization of vinyl-containing monomers such as, for example, monomeric vinyl halides, in a reaction mixture, in which process less waste is generated.

No. of claims: 15 No. of figures: 4

Note: Any interested individual may, within 3 months of publication of the grant, file objection thereof with the Grievance Committee after payment of grievance fees.

(19) pATENT OFFICE OF THE COOPERATION COUNCL FOR THE ARAB STATES OF THE GULF

(19) مكتب براءات الاختراع لمجلس التعاون لدول الخليج العربية

[12] **Patent**

[11] Patent No.: GC0001665 **[45] Date of Publishing the Grant of the Patent: 31/03/2012 17/2012**	**Number of the Decision to Grant the Patent: 11/24726** **Date of the Decision to Grant the Patent: 14/06/2011**
[21] Application No.: GCC/P/2006/6914 **[22] Filing Date: 13/09/2006** **[30] Priority:** **[31] Priority No. [32] Priority date [33] State** **102005044177.7 15/09/2005 DE** **[72] Inventors: 1- Sven Petersen،2- Michael Benje،3- Peter Kammerhofer** **[73] Owners: 1- Vinnolit GmbH & Co. KG, D-84508, Burgirchen, Germany, 2- Uhde GmbH, Friedrich Uhde-straBe 15, 44141, Dortmund, Germany** **[74] Agent: Suleiman I. Al-Ammar**	**[51] Int. Cl.[7]: C07C17/02, 19/045** **[56] Cited Documents:** **- WO 01/3452 A2 (KRUPP UHDE GMBH [DE]; BENJE MICHAEL [DE]; PORSCHA PETER [DE]; VON EGEL) 17 May 2001** **Examiner: Ali Ahmed Almulla**

[54] PROCESS FOR OPERATING A DISTILLATION COLUMN FOR THE PURIFICATION OF 1,2-DICHLOROETHANE AND FOR THE COUPLED CONCENTRATION OF CAUSTIC SODA SOLUTION BY EVAPORATION

[57] Abstract: Process for operating a distillation column for the removal of water and lower-boiling components than 1,2~dichloroethane from 1,2~dichloroethane in which at least part of the heat from condensation of the aqueous vapours from the distillation column is used to concentrate caustic soda solution by evaporation; furthermore, at least part of the 1,2-dichloroethane formed when chlorine and ethylene react in a direct chlorination unit is used to heat said distillation column and can subsequently also be used as a heat transfer fluid to concentrate caustic soda solution by evaporation.

No. of claims: 3 No. of figures: 1

Fig. 1

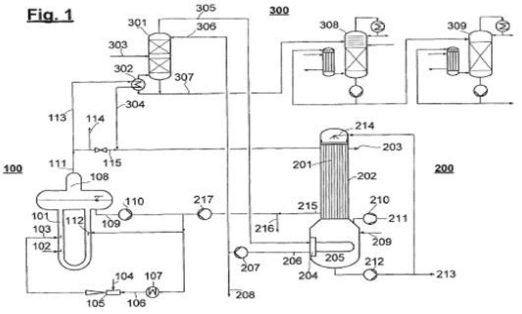

Note: Any interested individual may, within 3 months of publication of the grant, file objection thereof with the Grievance Committee after payment of grievance fees.

(19) pATENT OFFICE OF THE COOPERATION COUNCL FOR THE ARAB STATES OF THE GULF

(19) مكتب براءات الاختراع لمجلس التعاون لدول الخليج العربية

[12] **Patent**

[11] Patent No.: GC0001666 **[45] Date of Publishing the Grant of the Patent: 31/03/2012 17/2012**	**Number of the Decision to Grant the Patent: 11/24700** **Date of the Decision to Grant the Patent: 14/06/2011**
[21] Application No.: GCC/P/2006/7493 **[22] Filing Date: 20/12/2006** **[30] Priority:** **[31] Priority No. [32] Priority date [33] State** **0526232,4 22/12 /2005 GB** **0607087,4 07/04/2006 GB** **0607088,2 07/04/2006 GB** **0609902,2 18/05/2006 GB** **0620336,8 12/10/2006 GB** **0620337,6 12/10/2006 GB** **0620815,1 19/10/2006 GB** **0620816,9 19/10/2006 GB** **[72] Inventors: 1- Nathalie Marie-Josephe Garcon،2- Philippe Vincent Hermand،3- Ralph Leon Biemans،4- Jan Poolman،5- Marcelle Paulette Van Mechelen** **[73] Owner: GlaxoSmithKline Biologicals S.A., Rue De Ilnstitut 89, B-1330, Rixensart, Belgium** **[74] Agent: Suleiman I. Al-Ammar**	**Int. Cl.[7]: A61K 39/09, 39/385; A61P 11/00** **[56] Cited Documents:** **- WO 03/051392 A (GLAXOSMITHKLINE BIOLOG SA [BE]; LAFERRIERE CRAIG ANTHONY JOSEP [CA]; P) 26 June 20003** **- US 2003/147922 A1 (CAPIAU CARINE [BE] et al.) 07 August 2003** **Examiner: Nouf Saleh Alnassban**

[54] IMPROVED STREPTOCOCCUS PNEUMONIA VACCINE

[57] Abstract: The present invention discloses an immunogenic composition comprising S. pneumoniae capsular saccharide conjugates from serotypes 19A and 19F wherein 19A is conjugated to a first bacterial toxoid and 19F is conjugated to a second bacterial toxoid. Vaccines, methods of making vaccines and uses of the vaccines are also described.

No. of claims: 124 No. of figures: 10

Note: Any interested individual may, within 3 months of publication of the grant, file objection thereof with the Grievance Committee after payment of grievance fees.

(19) pATENT OFFICE OF THE COOPERATION COUNCL FOR THE ARAB STATES OF THE GULF

(19) مكتب براءات الاختراع لمجلس التعاون لدول الخليج العربية

[12] Patent

[11] Patent No.: GC0001667 **[45] Date of Publishing the Grant of the Patent: 31/03/2012 17/2012**	**Number of the Decision to Grant the Patent: 11/24589** **Date of the Decision to Grant the Patent: 14/06/2011**
[21] Application No.: GCC/P/2007/8328 **[22] Filing Date: 15/05/2007** **[30] Priority:** **[31] Priority No. [32] Priority date [33] State** **06114009.1 16/05/2006 EP** **[72] Inventors: 1- Ronald Jan Schoonebeek، 2- Carolus Matthias Anna Maria Mesters** **[73] Owner: Shell Internationale Research Maatschsppij B.V., Carel van Bylandtlaan 30, 2596 HR, The Hauge, The Netherlands** **[74] Agent: Suleiman I. Al-Ammar**	**[51] Int. Cl.[7]: C01B 31/26; E21B 43/16** **[56] Cited Documents:** **- US 3 847 220 A (ALLEN 3 et al.) 12 November 1974** **- us 2 492 719 A (TRACKER CARLISLE M) 27 December 1949** **Examiner: Bander M. Al-Thobity**

[54] A PROCESS FOR THE MANUFACTURE OF CARBON DISULPHIDE

[57] Abstract: The invention provides a process for the manufacture of carbon disulphide comprising supplying a molecular oxygen-containing gas and a feedstock comprising a hydrocarbonaceous compound to a reaction zone containing a liquid elemental sulphur phase and reacting, in the liquid sulphur phase, at a temperature in the range of from 300 to 750 °C, the hydrocarbonaceous compound with elemental sulphur to form carbon disulphide and hydrogen sulphide and oxidising at least part of the hydrogen sulphide formed to elemental sulphur and water.

The invention further provides the use of a liquid stream comprising carbon disulphide, hydrogen sulphide and carbonyl sulphide obtainable such process for enhanced oil recovery.

No. of claims: 9

Note: Any interested individual may, within 3 months of publication of the grant, file objection thereof with the Grievance Committee after payment of grievance fees.

(19) pATENT OFFICE OF THE COOPERATION COUNCL FOR THE ARAB STATES OF THE GULF

(19) مكتب براءات الاختراع لمجلس التعاون لدول الخليج العربية

[12] **Patent**

[11] Patent No.: GC0001668 **[45] Date of Publishing the Grant of the Patent: 31/03/2012 17/2012**	**Number of the Decision to Grant the Patent: 11/24734** **Date of the Decision to Grant the Patent: 15/06/2011**
[21] Application No.: GCC/P/2007/8449 **[22] Filing Date: 06/06/2007** **[30] Priority:** **[31] Priority No. [32] Priority date [33] State** **06115219.5 09/06/2006 EP** **11/449,649 09/06/2006 USA**	**[51] Int. Cl.[7]: B65D 21/02, 43/02, 51/24, 43/26** **[56] Cited Documents:** **- EP 1512637 A (HUHTAMAKI FRANCE S A [FR]) 09 March 2005** **- WO 2005075314 A (NUTRICIA NV [NL]; CRAWFORD KAREN RITA [GB]; LUTTIK NICOLAAS [NL]) 18 August 2005**
[72] Inventors: 1- Luttik, Nicolaas، 2- Hageman, Robert Johan Joseph **[73] Owner: N.V. Nutricia, Eerste Stationsstraat 186, NL-2712 HM, Zoetermeerz, Netherlands** **[74] Agent: Suleiman I. Al-Ammar**	**Examiner: NOUF SALEH ALNASSBAN**

[54] CONTAINER ASSEMBLY HAVING STACKING MEANS

[57] Abstract: Container assembly comprising a container part and a lid part. The lid part has a connection portion to be connected to said container part. For automatic assembly of the container assembly from the container part and the lid part it is advantageous that separate lid parts can be manipulated easily. To that end it is proposed to embody the lid parts such a way that they are stackable in a stable way. More particular it is proposed to provide the top side of the lid with a circumferential cam which can engage inside a circumferential rim of the connection portion. To be able to remove dust and debris from the top side of the lid it is proposed to provide a circumferential cam with interruptions.; In the embodiment wherein part of the lid is shaped to correspond with its aimed contents, as is for example part of the spoon, the interruption should preferably be provided at the location of such shape such as a spoon. If the container assembly is rectangular such shapes preferably extend diagonally and the interruptions are also provided diagonally. In this way a very stable stacking position is obtained. The cam on the lid is preferably embodied to also be engagable with the circumferential edge of the bottom of a further container so that a number of containers can be stacked in a stable way.

No. of claims: 16 No. of figures: 8

Note: Any interested individual may, within 3 months of publication of the grant, file objection thereof with the Grievance Committee after payment of grievance fees.

(19) pATENT OFFICE OF THE COOPERATION COUNCL FOR THE ARAB STATES OF THE GULF

(19) مكتب براءات الاختراع لمجلس التعاون لدول الخليج العربية

[12] **Patent**

[11] Patent No.: GC0001669 **[45] Date of Publishing the Grant of the Patent: 31/03/2012 17/2012**	**Number of the Decision to Grant the Patent: 11/24730** **Date of the Decision to Grant the Patent: 14/06/2011**
[21] Application No.: GCC/P/2007/8752 **[22] Filing Date: 22/07/2007** **[30] Priority:** **[31] Priority No. [32] Priority date [33] State** **8052/8052 31/03/2007 GCC**	**Int. Cl.[7]: A61K 47/48, 39/085, 39/385; A61P 31/04** **[56] Cited Documents:** **- US 2005/118198 A1 (PIER GERALD B [US] et al.) 02 June 2005**
[72] Inventors: 1- Ralph Leon Biemans، 2- Pierre Duvivier، 3- Tomas Maira-Litran **[73] Owners: 1- The Brigham and Womens Hospital, Inc.,75 Francis Street, 02115-MA, Boston, USA، 2- GlaxoSmithKline Biologicals S.A., Rue De I`lnstitut 89, B-1330 Rixensart, Belgium** **[74] Agent: Suleiman I. Al-Ammar**	**Examiner: Nouf Saleh Alnassban**

[54] CONJUGATION PROCESS

[57] Abstract: The present application describes a process for conjugating a PNAG which is less than 40% N-acetylated to a carrier protein comprising the steps of a) activating the PNAG by adding a linker comprising a maleimide group to form an activated PNAG b) activating the carrier protein by adding a linker comprising a sulphydryl group to form an activated carrier protein and c) reacting the activated PNAG and the activated carrier protein to form a PNAG-carrier protein conjugate.

No. of claims: 44

Note: Any interested individual may, within 3 months of publication of the grant, file objection thereof with the Grievance Committee after payment of grievance fees.

(19) pATENT OFFICE OF THE COOPERATION COUNCL FOR THE ARAB STATES OF THE GULF

(19) مكتب براءات الاختراع لمجلس التعاون لدول الخليج العربية

[12] **Patent**

[11] Patent No.: GC0001670 **[45] Date of Publishing the Grant of the Patent: 31/03/2012 17/2012**	**Number of the Decision to Grant the Patent: 11/24716** **Date of the Decision to Grant the Patent: 14/06/2011**
[21] Application No.: GCC/P/2007/8803 **[22] Filing Date: 30/07/2007** **[72] Inventors: 1- John Mak** **[73] Owners: 1- Dalian Institute of Chemical Physics, Chinese Academy of Sciences, 457 Zhongshan Road, 116023, Dalian, China,** **2- Fluor Technologies Corporation, 3 Polaris Way,** **[74] Agent: Suleiman I. Al-Ammar**	**[51] Int. Cl.[7]: F25J 3/00** **[56] Cited Documents:** **- US 4430103 A (GRAY et al.) 07 February 1984** **- US 2004/148964 A1 (PATEL et al.) 05 August 2004** **- US 4251249 A (GULSBY) 17 February 1981** **- US 4690702 A (PARADOWSKI et al.) 01 September 1987** **- US 4617039 A (BUCK) 14 October 1986** **Examiner: Fahed Zoaid AlMutairi**

[54] CONFIGURATIONS AND METHODS FOR RICH GAS CONDITIONING FOR NGL RECOVERY

[57] Abstract: Contemplated gas treatment plants for recovery of NGL from rich feed gas include an upstream conditioning unit in which heavier hydrocarbons, and most typically C5 and heavier are removed prior to feeding the processed feed gas to an NGL recovery plant, thus avoiding the need to process the heavier hydrocarbons in the NGL recovery plant. Such conditioning units advantageously reduce energy demand for dehydration otherwise required and allow for production of C2-C4, and C5+ streams that can be sold as valuable products.

No. of claims: 20 No. of figures: 1

Note: Any interested individual may, within 3 months of publication of the grant, file objection thereof with the Grievance Committee after payment of grievance fees.

(19) pATENT OFFICE OF THE COOPERATION COUNCL FOR THE ARAB STATES OF THE GULF

(19) مكتب براءات الاختراع لمجلس التعاون لدول الخليج العربية

[12] **Patent**

[11] Patent No.: GC0001671 **[45] Date of Publishing the Grant of the Patent: 31/03/2012 17/2012**	**Number of the Decision to Grant the Patent: 11/24714** **Date of the Decision to Grant the Patent: 14/06/2011**
[21] Application No.: GCC/P/2007/8850 **[22] Filing Date: 06/08/2007** **[30] Priority:** **[31] Priority No. [32] Priority date [33] State** **MI2006A 0015880 06/08/2006 IT** **MI2007A 000303 16/02/2007 IT** **[72] Inventors: 1- Wallace O Neil Parker، 2- Urbano Diaz Morales، 3- Caterina Rizzo، 4- Stefano Zanardi، 5- Angela Carati، 6- Giuseppe Bellussi، 7- Roberto Millini** **[73] Owner: ENI S.p.A., Piazzale E, 1-Mattei, Rome, Italy** **[74] Agent: Suleiman I. Al-Ammar**	**[51] Int. Cl.[7]: C01B 37/00, 37/02, 33/44; C09C 1/30** **[56] Cited Documents:** **- B. J. MELDE, B.T. HOLLAND, C.F. BLANFORD, A. STEIN "Mesoporous Sieves with Unified Hybrid Inorganic/Organic Frameworks" CHEMISTRY OF MATERIALS, Vol.11, 10 September 1999** **Examiner: Fahed Zoaid AlMutairi**

[54] ORGANIC-INORGANIC HYBRID SILICATES AND METAL-SILICATES HAV-ING AN ORDERED STRUCTURE

[57] Abstract: **The present invention relates to new organic-inorganic hybrid silicates and metal-silicates called ECS, characterized by an X-ray powder diffraction pattern with reflections exclusively at angular values higher than 4.0° of 2θ, preferably at angular values higher than 4.7°, and an ordered structure containing structural units having formula (a) wherein R is an organic group:**

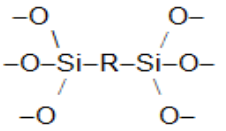

(a)

and possibly containing one or more elements T selected from groups III B, IV B, V B and transition metals, with a Si/(Si + T) molar ratio in said structure higher than 0.3 and lower than or equal to 1, wherein Si is the silicon contained in the structural unit (a). A process is also described, starting from disilanes, for the preparation of these materials, which does not include the use of templates or surfactants. These materials can be used as molecular sieves, adsorbents, in the field of catalysis, in the field of electronics, in the field of sensors, in the field of nanotechnologies.

No. of claims: 66 **No. of figures: 10**

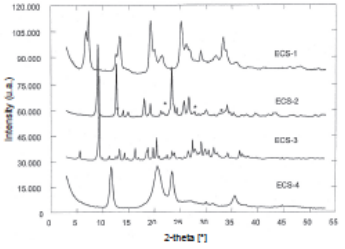

Note: Any interested individual may, within 3 months of publication of the grant, file objection thereof with the Grievance Committee after payment of grievance fees.

(19) pATENT OFFICE OF THE COOPERATION COUNCL FOR THE ARAB STATES OF THE GULF

(19) مكتب براءات الاختراع لمجلس التعاون لدول الخليج العربية

[12] **Patent**

[11] Patent No.: GC0001672 **[45] Date of Publishing the Grant of the Patent: 31/03/2012 17/2012**	**Number of the Decision to Grant the Patent: 11/24704** **Date of the Decision to Grant the Patent: 14/06/2011**
[21] Application No.: GCC/P/2003/3109 **[22] Filing Date: 16/12/2003** **[30] Priority:** **[31] Priority No. [32] Priority date [33] State** **60/434,115 16/12/2002 US** **60/526,163 01/12/3003 US**	**[51] Int. Cl.[7]: C07K 16/28, 14/705; C12N 15/13, 15/13, 15/12; A61K 39/395, 35/00, 37/00; C12P 21/08** **[56] Cited Documents:**
[72] Inventors: 1- Leonard G. Presta، 2- Craig W. Crowley، 3- Gerald R. Nakamura، 4- Henry B. Lowman، 5- Andrew C. Chan، 6- Camellia W. Adams **[73] Owner: Genentech, Inc., 1 DNA way, South San Francisco, California 94080, USA**	**- US 5576195 A (X0IVIA CORP) 19 November 1996** **- WO 0009160 Al (IDEC PHARIV1A CORP) 24 February 2000** **- WO 0076542 A1 (CONSIGLIO NAZ DELLE RICERCHE) 21 December 2000** **- SHIELDS, R. L. et al. High Resolution Mapping of the Binding Site on Human IgGI for FcyRI, FcyRII, FcyRIII, and Fan and Design of IgG1 Variants with Improved Binding to the FcyR. The Journal of Biological Chemistry. 02 March 2001 Vol. 276, No 9,Pages6591-6604, ISSN 0021-9258**
[74] Agent: Suleiman I. Al-Ammar	**Examiner: Majed I.Al-Rufayyig**

[54] IMMUNGOLOBULIN VARIANTS AND USES THEREOF

[57] Abstract: The invention provides humanized and chimeric anti-CD20 antibodies for treatment of CD20 positive malignancies and autoimmune diseases.

No. of claims: 47 No. of figures: 21

Note: Any interested individual may, within 3 months of publication of the grant, file objection thereof with the Grievance Committee after payment of grievance fees.

(19) pATENT OFFICE OF THE COOPERATION COUNCL FOR THE ARAB STATES OF THE GULF

(19) مكتب براءات الاختراع لمجلس التعاون لدول الخليج العربية

[12] **Patent**

[11] Patent No.: GC0001673 **[45] Date of Publishing the Grant of the Patent: 31/03/2012 17/2012**	**Number of the Decision to Grant the Patent: 11/24706** **Date of the Decision to Grant the Patent: 14/06/2011**
[21] Application No.: GCC/P/2007/7850 **[22] Filing Date: 27/02/2007** **[30] Priority:** **[31] Priority No. [32] Priority date [33] State** **928.1009200610 03/03/2006 DE** **[72] Inventors: 1- Dirk Heimbach، 2- Daniela Paulsen، 3- Dieter Lang، 4- Kerstin Henninger، 5- Rudolf Schohe-Loop، 6- Holger Zimmermann، 7- Dagmar Karthaus، 8- Niels Svenstrup، 9- Tobias Wunberg، 10- Joachim Schuhmacher، 11- Andreas Goeller، 12- Bernd Riedl** **[73] Owner: Aicuris GmbH & Co. KG, Friedrich - Ebert- Str. 475, 42117, Wuppertal, Germany** **[74] Agent: Suleiman I. Al-Ammar**	**[51] Int. Cl.[7]: C07D 213/73, 413/04; A61K 31/4439, 31/44, 31/00** **[56] Cited Documents:** **- WO 02/085869 A (BAYER AG [DE]; WUNBERG TOBIAS [DE]; BENDER WOLFGANG [DE]; [DE]; ECKENBERG PE) 31 October 2002** **Examiner: Majed I.Al-Rufayyig**

[54] SUBSTITUTED ARYLSULFONAMIDES

[57] Abstract: The invention relates to substituted arylsulfonamides and to processes for their preparation as well as to their use for the production of medicaments for the treatment and/or prophylaxis of diseases, especially for use as antiviral agents, particularly against cytomegaloviruses.

No. of claims: 9

Note: Any interested individual may, within 3 months of publication of the grant, file objection thereof with the Grievance Committee after payment of grievance fees.

(19) pATENT OFFICE OF THE COOPERATION COUNCL FOR THE ARAB STATES OF THE GULF

(19) مكتب براءات الاختراع لمجلس التعاون لدول الخليج العربية

[12] **Patent**

[11] Patent No.: GC0001674 **[45] Date of Publishing the Grant of the Patent: 31/03/2012 17/2012**	**Number of the Decision to Grant the Patent: 11/24708** **Date of the Decision to Grant the Patent: 14/06/2011**
[21] Application No.: GCC/P/2007/8845 **[22] Filing Date: 05/08/2007** **[30] Priority:** **[31] Priority No. [32] Priority date [33] State** **0607283 11/08/2006 FR** **[72] Inventors: 1- FOSSEY Valerie، 2- ALTENBURGER Jean-Michel، 3- LASSALLE Gilbert، 4- PETIT Frederic، 5- VERNIERES Jean Claude, 6- JANIAK Philip** **[73] Owner: Sanofi – Aventis, 174 Avenue de France, FR-75013, Paris, France** **[74] Agent: Suleiman I. Al-Ammar**	**[51] Int. Cl.[7]: C07D 213/60, 241/10, 401/04; A61K 31/435; A61P 9/00** **[56] Cited Documents:** **- WO 2004/073634 A2 (ENCYSIVE PHARMACEUTICALS INC [US]; WU CHENGDE [US]; ANDERSON ERIC C [U)** **- WO 2004/078114 A2 (ENCYSIVE PHARMACEUTICALS INC [US]; WU CHENGDE [US]; ANDERSON ERIC C [U) 16 September 2004** **- WO 03/051850 A (ASTRAZENECA AB [SE]; ASTRAZENECA UK LTD [GB]; WILSTERMAN JOHAN MICHAEL) 26 June 2003** **- FR 2856684 A (SANOFI SYTHELABO [FR]) 31 December 2004** **Examiner: Majed I.Al-Rufayyig**

[54] DERIVATIVES OF 5,6-BISARYL-2-PYRIDINE-CARBOXAMIDE, THEIR PREPARATION AND THEIR APPLICATION IN THERAPEUTICS AS ANTAGONISTS OF UROTENSIN II RECEPTORS

[57] Abstract: The invention relates to compounds corresponding to formula (I):

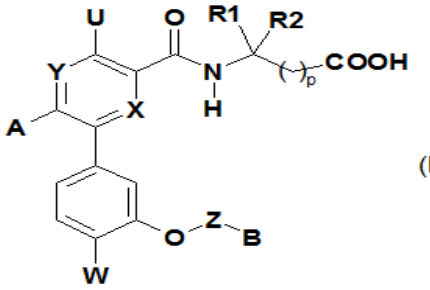

(I)

in which X, Y, U, A, B, W, Z, R1 and R2 are as defined in the description. Method of preparation and application in therapeutics.

No. of claims: 22

Note: Any interested individual may, within 3 months of publication of the grant, file objection thereof with the Grievance Committee after payment of grievance fees.

(19) pATENT OFFICE OF THE COOPERATION COUNCL FOR THE ARAB STATES OF THE GULF

(19) مكتب براءات الاختراع لمجلس التعاون لدول الخليج العربية

[12] **Patent**

[11] Patent No.: GC0001675 **[45] Date of Publishing the Grant of the Patent: 31/03/2012 17/2012**	**Number of the Decision to Grant the Patent: 11/24702** **Date of the Decision to Grant the Patent: 14/06/2011**
[21] Application No.: GCC/P/2006/7396 **[22] Filing Date: 12/12/2006** **[30] Priority:** **[31] Priority No. [32] Priority date [33] State** **PCT/EP2005/013316 12/12/2005 PCT** **[72] Inventor: Khalid S. Abu Khabar** **[73] Owner: King Faisal Specialist Hospital & Research Centre, Takhassusi Street, P.O.BOX 3354, Riyadh 11211, KSA** **[74] Agent: Suleiman I. Al-Ammar**	**[51] Int. Cl.[7]: C12N 15/85; 15/11, 15/67; A61K 48/00** **[56] Cited Documents:** **- PROVOST Pierre R. et al.: "Length Increase of the Human a-Globin 3'-Untranslatd Region Disrupts Stability of the Pre-mRNA hut Not That of the Mature mRNA". The Journal Of Biological Chemistry, 29 September 2000** **Examiner: Majed I.Al-Rufayyig**

[54] HYBRID 3 UNTRANSLATED REGIONS SUITABLE FOR EFFICIENT PROTEIN EXPRESSION IN MAMMALIAN CELLS

[57] Abstract: The present invention describes the use of hybrid short 3' untranslated (3'UTR) regions which are composed of two regions, one region from an 3' untranslated region of a stable eukaryotic mRNA, and another region from the downstream end of an 3' untranslated region of another eukaryotic mRNA that contains a polyadenylation (polyA) signal. The use of such hybrid regions allows for an efficient protein expression when used in conjunction with circular or linear expression DNA molecules. The present invention provides a recombinant DNA that is composed of a promoter, a protein coding region, and the hybrid 3'UTR in a continuous and directional orientation. The efficient expression systems of the invention are suitable for the economical and efficient production of therapeutic proteins and for use with both transient and stable expression systems.

No. of claims: 3 No. of figures: 4

Note: Any interested individual may, within 3 months of publication of the grant, file objection thereof with the Grievance Committee after payment of grievance fees.

(19) pATENT OFFICE OF THE COOPERATION COUNCL FOR THE ARAB STATES OF THE GULF

(19) مكتب براءات الاختراع لمجلس التعاون لدول الخليج العربية

[12] **Patent**

[11] Patent No.: GC0001676 **[45] Date of Publishing the Grant of the Patent: 31/03/2012 17/2012**	**Number of the Decision to Grant the Patent: 11/24856** **Date of the Decision to Grant the Patent: 16/06/2011**
[21] Application No.: GCC/P/2007/8762 **[22] Filing Date: 24/07/2007** **[30] Priority:** **[31] Priority No. [32] Priority date [33] State** **60/820604 27/02/2006 US** **60/886178 23/01/2007 US** **[72] Inventors: 1- Sumihiro Nomura، 2- Shigeki Sakamaki** **[73] Owner: Mitsubishi Tanabe Pharma Corporation, 2-10 Dosho-machi 3-chome, Chuo-ku, Osaka-shi, Osaka, 8505-541 Japan** **[74] Agent: Suleiman I. Al-Ammar**	**[51] Int. Cl.[7]: C07H 19/04; A61K 31/706** **[56] Cited Documents:** **- WO 2006/035796 A (KISSEI PHARMACEUTICAL [JP]; OHNO KOHSUKE [JP]; TERANISHI HIROTAKA [JP]) 06 April 2006** **- WO 2005/012326 A (TANABE SEIYAKU CO [JP]; NOMURA SUMIHIRO; KAWANISHI EIJI; UETA KIICHIRO) 10 February 2005** **Examiner: Majed I.Al-Rufayyig**

[54] INDOLE DERIVATIVES

[57] Abstract: The present invention relates to novel indolederivatives of formula (i) or apharmaceutically acceptable salt thereof:

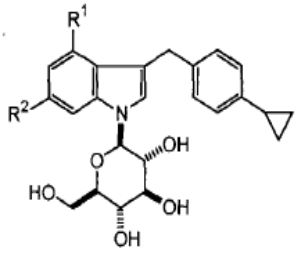

(I)

wherein r1 is f luorine, or chlorine, and r2 is hydrogen, or fluorine, which are sglt inhibitors and are useful for treatment or prevention of diabetes and related conditions.

No. of claims: 10

Note: Any interested individual may, within 3 months of publication of the grant, file objection thereof with the Grievance Committee after payment of grievance fees.

(19) pATENT OFFICE OF THE COOPERATION COUNCL FOR THE ARAB STATES OF THE GULF

(19) مكتب براءات الاختراع لمجلس التعاون لدول الخليج العربية

[12] **Patent**

[11] Patent No.: GC0001677 **[45] Date of Publishing the Grant of the Patent: 31/03/2012 17/2012**	**Number of the Decision to Grant the Patent: 11/24759** **Date of the Decision to Grant the Patent: 15/06/2011**
[21] Application No.: GCC/P/2007/8881 **[22] Filing Date: 11/08/2007** **[30] Priority:** **[31] Priority No. [32] Priority date [33] State** **60/838.272 16/08/2006 US** **[72] Inventors: 1- Wylie Solang Palmer ،2- Zachary Kevin Sweeney، 3- Joshua Kennedy-Smith** **[73] Owner: F. Hoffmann - La Roche AG, 124 Grenzacherstrasse, CH-4070, Basle, Switzerland** **[74] Agent: kadasa Law Firm**	**[51] Int. Cl.[7]: C07D 231/12, 231/56, 471/04, 487/04; A61K 31/415, 31/4162; A61P 31/18** **[56] Cited Documents:** **- WO 2004/085411 A (HOFFMANN LA ROCHE [CH]) 07 October 2004** **- WO 2005/090317 A (HOFFMANN LA ROCHE [CH]; DUNN JAMES PATRICK [US]; ELWORTHY TODD RICHARD) 29 September 2005** **Examiner: Majed I.Al-Rufayyig**

[54] NON-NUCLEOSIDE REVERSE TRANSCRIPTASE INHIBITORS

[57] Abstract: The present invention provides for compounds useful for treating an HIV infection, or preventing an HIV infection, or treating AIDS or ARC. The compounds of the invention are of formula I wherein A is A1, A2, A3 or A4 and R^1, R^2, R^3, R^{4a}, R^{4b}, R^5, R^6, Ar, X^1, X^2, X^4, X^4 and X^5 are as herein defined. Also disclosed in the present invention are methods of treating an HIV infection with compounds defined herein and pharmaceutical compositions containing said compounds.

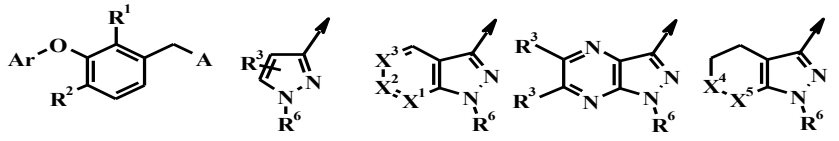

I A1 A2 A3 A4

No. of claims: 23

Note: Any interested individual may, within 3 months of publication of the grant, file objection thereof with the Grievance Committee after payment of grievance fees.

(19) pATENT OFFICE OF THE COOPERATION COUNCL FOR THE ARAB STATES OF THE GULF

(19) مكتب براءات الاختراع لمجلس التعاون لدول الخليج العربية

[12] **Patent**

[11] Patent No.: GC0001678 **[45] Date of Publishing the Grant of the Patent: 31/03/2012 17/2012**	**Number of the Decision to Grant the Patent: 11/24761** **Date of the Decision to Grant the Patent: 15/06/2011**
[21] Application No.: GCC/P/2001/1583 **[22] Filing Date: 21/08/2001** **[30] Priority:** **[31] Priority No. [32] Priority date [33] State** **00117918.3 21/08/2000 EP** **[72] Inventors: 1- Bernd Buettelmann، 2- Holger Fischer، 3- Georg Jaeschke، 4- Rene Wyler، 5- Alexander Alanine، 6- Marie- Paule Heitz Neidhart، 7- Joerg Huwyler، 8- Emmanuel Pinard** **[73] Owner: F. Hoffmann- La Roche Ag, 124 Grenzacherstrasse, CH-4070, Basle, Switzerland** **[74] Agent: kadasa Law Firm**	**[51] Int. Cl.[7]: C07D 211/42; A61K 31/445; A61P 25/28; C07F 9/59** **[56] Cited Documents:** **- EP 0824098 A (HOFFMANN LA ROCHE) 18 February 1998** **- WO 0075109 A (HOFFMANN LA ROCHE) 14 December 2000** **Examiner: Majed I.Al-Rufayyig**

[54] PRODRUGS TO NMDA RECEPTOR LIGANDS

[57] Abstract: The invention relates to compounds of the general formula (I)

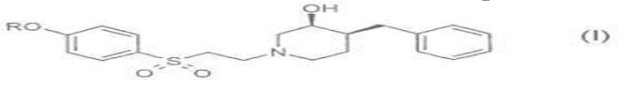

(I)

wherein R is a) -C(O)(CH2)nC(O)OH,

b)



(b)

wherein R^1 is $-N(R^2)(R^3)$ and R^2/R^3 are independently from each other hydrogen or lower alkyl, or is a cyclic tertiary amine, optionally substituted by lower alkyl,

c) -P(O)(OH)2, or is

d) $-C(O)(CH2)nNHC(O)(CH2)nN(R^2)(R^3)$; and n is 1, 2, 3 or 4; and to pharmaceutically acceptable acid addition salts thereof. These compounds may be used as prodrugs for the parent compound of formula (II)

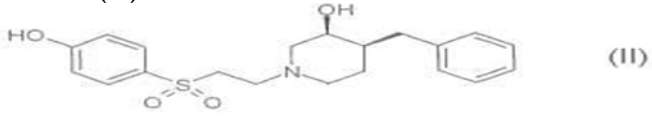

(II)

which are useful in the treatment of NMDA receptor-related diseases.

No. of claims: 14

Note: Any interested individual may, within 3 months of publication of the grant, file objection thereof with the Grievance Committee after payment of grievance fees.

(19) pATENT OFFICE OF THE COOPERATION COUNCL FOR THE ARAB STATES OF THE GULF

(19) مكتب براءات الاختراع لمجلس التعاون لدول الخليج العربية

[12] **Patent**

[11] Patent No.: GC0001679 **[45] Date of Publishing the Grant of the Patent: 31/03/2012 17/2012**	**Number of the Decision to Grant the Patent: 11/25237** **Date of the Decision to Grant the Patent: 26/06/2011**
[21] Application No.: GCC/P/2004/3341 **[22] Filing Date: 29/03/2004** **[30] Priority:** **[31] Priority No. [32] Priority date [33] State** **60/459.136 31/03/2003 US**	**[51] Int. Cl.[7]: B71J 23/50** **[56] Cited Documents:** **- EP 0266015 A1 (SHELL INTERNATIONALE RESEARCH MAATSCHAPPIJ B.V.) 4 May 1988** **- US 4766105 A (LAURITZEN, A.M.) 23 August 1988** **- US 5100859 A (GERDES et al.) 31 March 1992** **- US 5380697 A (MATUSZ et al.) 10 January 1995**
[72] Inventors: 1- Martin Lysle Hess‹ 2- Marek Matusz‹ 3- Michael Alan Richard **[73] Owner: Shell Internationale Research Maatschsppij B.V., Carel van Bylandtlaan 30, 2596 HR, The Hauge, The Netherlands** **[74] Agent: Suleiman I. Al-Ammar**	**Examiner: Abdulaziz S. AL-Motek**

[54] A CATALYST COMPOSITION, A PROCESS FOR PREPARING THE CATALYST COMPOSITION AND A USE OF THE CATALYST COMPOSITION

[57] Abstract: A catalyst composition comprising a support having a surface area of at least 500 m2/kg, and deposited on the support:

- silver metal,

- a metal or component comprising rhenium, tungsten, molybdenum or a nitrate" or nitrite~forming compound, and

- a Group IA metal or component comprising a Group IA metal having an atomic number of at least 37, and in addition potassium,

wherein the Value of the expression (Q_K / R) + QHIA is in the range of from 1.5 to 30 mmole/kg, wherein Q_{HIA} and Q_K . represent the quantities in mmole/kg of the Group IA metal having an atomic number of at least 37 and potassium, respectively, present in the catalyst composition, the ratio of QHIA to QK is at least 1:1, the value of QK is at least O;Ol mmole/kg, and R is a dimensionless number in the range of from 1.5 to 5, the units mmole/kg being relative to the weight of the catalyst composition.

No. of claims: 23

Note: Any interested individual may, within 3 months of publication of the grant, file objection thereof with the Grievance Committee after payment of grievance fees.

(19) pATENT OFFICE OF THE COOPERATION COUNCL FOR THE ARAB STATES OF THE GULF

(19) مكتب براءات الاختراع لمجلس التعاون لدول الخليج العربية

[12] **Patent**

[11] Patent No.: GC0001680 **[45] Date of Publishing the Grant of the Patent: 31/03/2012 17/2012**	**Number of the Decision to Grant the Patent: 11/26949** **Date of the Decision to Grant the Patent: 12/09/2011**
[21] Application No.: GCC/P/2005/4506 **[22] Filing Date: 03/04/2005** **[30] Priority:** **[31] Priority No. [32] Priority date [33] State** **10/980,996 04/11/2004 US** **US04/36650 04/11/2004 PCT** **[72] Inventors: 1- Elizabeth A. Benham، 2- Joel L. Martin، 3- Gil R. Hawley، 4- Kathy S. Collins، 5- Max P. McDaniel، 6- Michael D. Jensen** **[73] Owner: Chevron Phillips Chemical Company LP, 10001 Six Pines Drive, The Woodlands, TX 77387, USA** **[74] Agent: Saud M. A. Shawwaf**	**[51] int. Cl.[7]: C08F 10/02, 4/02,4/642, 4/69** **[56] Cited Documents:** **- EP 0763550 A (SHOWA DENKO ABUSHIKI KAISHA) 19 March 1997** **- EP 1114832 A (SUMITOMO CHEMICAL COMPANY, LIMITED) 11 July 2001** **Examiner: Fahed Zoaid AlMutairi**

[54] ORGANOCHROMIUM/METALLOCENE COMBINATION CATALYSTS FOR PRODUCING BIMODAL RESINS

[57] Abstract: This invention relates to the field of olefin polymerization catalyst compositions, and methods for the polymerization and copolymerization of olefins, including polymerization methods using a supported catalyst composition. In one aspect, the present invention encompasses a catalyst composition comprising the contact product of at least one metallocene compound, at least one organochromium compound, at least one chemically-treated solid oxide, and at least one organoaluminum compound.

No. of claims: 19 No. of figures: 2

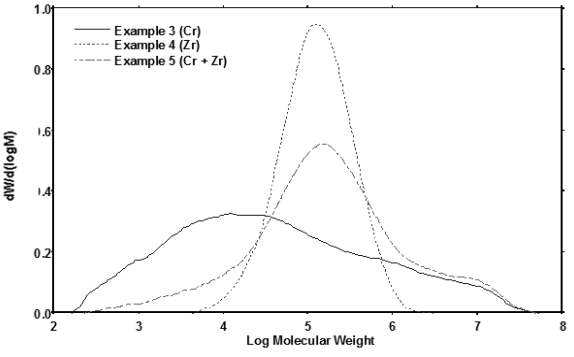

Note: Any interested individual may, within 3 months of publication of the grant, file objection thereof with the Grievance Committee after payment of grievance fees.

(19) pATENT OFFICE OF THE COOPERATION COUNCL FOR THE ARAB STATES OF THE GULF

(19) مكتب براءات الاختراع لمجلس التعاون لدول الخليج العربية

[12] Patent

[11] Patent No.: GC0001681 [45] Date of Publishing the Grant of the Patent: 31/03/2012 17/2012	Number of the Decision to Grant the Patent: 11/24466 Date of the Decision to Grant the Patent: 04/06/2011
[21] Application No.: GCC/P/2005/5265 [22] Filing Date: 15/10/2005 [30] Priority: [31] Priority No. [32] Priority date [33] State 10/966.760 15/10/2004 US [72] Inventor: Morello, Frederick [73] Owner: M.I.C. Industries, Inc., One Fountain Square, 11911 Freedom Drive ,Virginia 20190, Reston, USA [74] Agent: Suleiman I. Al-Ammar	[51] Int. Cl.[7]: E04B 1/32 [56] Cited Documents: - US 4759159 A (BLAZLEY) 26 July 1998 - US 3276171 A (BROWN) 04 October 1966 Examiner: Fahad M. al-Baker

[54] BUILDING PANEL AND BUILDING STRUCTURE

[57] Abstract: An improved building panel with increased stiffness and resistance to buckling is disclosed. The panel cross section is characterized by a novel center portion comprised of radially arranged longitudinal stiffening ribs which transition into side portions configured to allow joining of the panels. The configuration of the panel's center section results in an increased moment of inertia as well as higher resistance to positive and negative bending moments and local buckling when compared to existing designs. Additionally, the panel configuration allows curving longitudinally without corrugations. These improvements in the strength of the panel and the elimination of corrugations reduce design constraints on buildings constructed of such panels and allow larger buildings to be constructed.

No. of claims: 14 No. of figures: 10

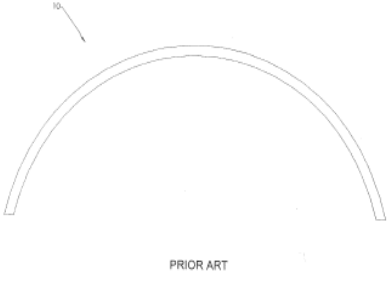

Note: Any interested individual may, within 3 months of publication of the grant, file objection thereof with the Grievance Committee after payment of grievance fees.

(19) pATENT OFFICE OF THE COOPERATION COUNCL FOR THE ARAB STATES OF THE GULF

(19) مكتب براءات الاختراع لمجلس التعاون لدول الخليج العربية

[12] **Patent**

[11] Patent No.: GC0001682 **[45] Date of Publishing the Grant of the Patent: 31/03/2012 17/2012**	**Number of the Decision to Grant the Patent: 11/27462** **Date of the Decision to Grant the Patent: 15/09/2011**
[21] Application No.: GCC/P/2007/8539 **[22] Filing Date: 20/06/2007** **[30] Priority:** **[31] Priority No. [32] Priority date [33] State** **60/818,990 06/07/2006 US** **[72] Inventors: 1- Michael W. Norris، 2- Steven E. Heiney، 3- Marvin L. Johnson، 4- Warren S. Ross** **[73] Owner: ExxonMobil Upstream Research Company, P.O.Box 2189,Houston, Texas,USA** **[74] Agent: Saud M. A. Shawwaf**	**[51] Int. Cl.[7]: G01V 1/38** **[56] Cited Documents:** **- US 3396950 A (WOOD) 13 August 1968** **- US 4557879 A (WEBER) 10 December 1985** **Examiner: Mohammed A. Aljaffar**

[54] DIVERSE BUBBLE SIZE GENERATION

[57] Abstract: Method and apparatus for producing a bubble curtain with a diversity of bubble diameters for purposes such as modifying the characteristics of a seismic source used in marine seismic surveys. Bubble generating elements are used that combine porous wall material with discrete holes (91) to create a curtain of diverse-sized bubbles (92).

No. of claims: 21 No. of figures: 9

Note: Any interested individual may, within 3 months of publication of the grant, file objection thereof with the Grievance Committee after payment of grievance fees.

(19) pATENT OFFICE OF THE COOPERATION COUNCL FOR THE ARAB STATES OF THE GULF

(19) مكتب براءات الاختراع لمجلس التعاون لدول الخليج العربية

[12] **Patent**

[11] Patent No.: GC0001683 **[45] Date of Publishing the Grant of the Patent: 31/03/2012 17/2012**	**Number of the Decision to Grant the Patent: 11/27464** **Date of the Decision to Grant the Patent: 15/09/2011**
[21] Application No.: GCC/P/2007/8232 **[22] Filing Date: 28/04/2007** **[30] Priority:** **[31] Priority No. [32] Priority date [33] State** **60/797,310 03/05/2006 US** **[72] Inventors: 1- Michael W. Norris، 2- Marvin L. Johnson** **[73] Owner: ExxonMobil Upstream Research Company, P.O BOX 2189, Houston,2489,77252,Texas, USA** **[74] Agent: Saud M. A. Shawwaf**	**[51] Int. Cl.[7]: G01V 1/00** **[56] Cited Documents:** **- US 3895343 A (FARR et al.) 15 July 1975** **Examiner: Mohammed A. Aljaffar**

[54] DATA ADAPTIVE VIBRATORY SOURCE ACQUISITION METHOD

[57] Abstract: Method for conducting a seismic survey (23) wherein the acquisition parameters are modified as the survey progresses using information (24) from sensors located to monitor structures and fixtures located in the survey area. The sensor output is compared to acceptable levels, and acquisition parameters such as the seismic source strength are adjusted (26) to prevent exceeding the acceptable levels. An automated arbitration scheme (22) is used to resolve conflicting system goals within survey resource constraints.

No. of claims: 11 No. of figures: 3

Note: Any interested individual may, within 3 months of publication of the grant, file objection thereof with the Grievance Committee after payment of grievance fees.

(19) pATENT OFFICE OF THE COOPERATION COUNCL FOR THE ARAB STATES OF THE GULF

(19) مكتب براءات الاختراع لمجلس التعاون لدول الخليج العربية

[12] **Patent**

[11] Patent No.: GC0001684 **[45] Date of Publishing the Grant of the Patent: 31/03/2012 17/2012**	**Number of the Decision to Grant the Patent: 11/26951** **Date of the Decision to Grant the Patent: 12/09/2011**
[21] Application No.: GCC/P/2007/8924 **[22] Filing Date: 20/08/2007** **[30] Priority:** **[31] Priority No. [32] Priority date [33] State** **2006-258437 25/09/2006 JP** **[72] Inventors: 1- Yoichi Umehara، 2- Yasuo Hosono، 3- Susumu Yamamoto، 4- Takeshi Minami، 5- Haruto Kobayashi** **[73] Owner: Chiyoda Corporation, 1-12 , chome-2Tsurumichuo ,ku-Tsurumi , Yokohama shi,ken-Kanaqawa , Japan** **[74] Agent: Saud M. A. Shawwaf**	**[51] Int. Cl.[7]: C07C 51/64** **[56] Cited Documents:** **- US 5801279 A (MIURA HIROYUKI [JP] et al.) 01 September 1998** **- EP 0196173 A1 (CELANESE CORP [US]) 01 October 1986** **- EP 0484020 A2 (BRITISH PETROLEUM CO [GB[ ) 06 May 1992** **- EP 0296584 A2 (UNION CARBIDE CORP [US] 28 December 1988** **- EP 0535605 A (UNION CARBIDE CHEM PLASTIC [US] 07 April 1993** **Examiner: Mohammad Al-Ismael**

[54] METHOD FOR REMOVING IODIDE COMPOUND FROM ORGANIC ACID

[57] Abstract: An iodide compound is adsorbed and removed from an organic acid containing the iodide compound as an impurity by passing the organic acid through a packed bed of a cation-exchange resin having silver ion carried thereon at 50 C or lower. The cation-exchange resin is a macroporous-type resin with an average particle size of 0.3 to 0.6 mm and an average pore size of 15 to 28 nm, and silver ion substitutes for 40 to 60% of the active site.

No. of claims: 2 No. of figures: 4

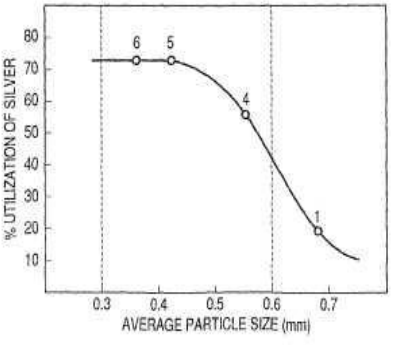

Note: Any interested individual may, within 3 months of publication of the grant, file objection thereof with the Grievance Committee after payment of grievance fees.

(19) pATENT OFFICE OF THE COOPERATION COUNCL FOR THE ARAB STATES OF THE GULF

(19) مكتب براءات الاختراع لمجلس التعاون لدول الخليج العربية

[12] **Patent**

[11] Patent No.: GC0001685 **[45] Date of Publishing the Grant of the Patent: 31/03/2012 17/2012**	**Number of the Decision to Grant the Patent: 11/26941** **Date of the Decision to Grant the Patent: 12/09/2011**
[21] Application No.: GCC/P/2007/9693 **[22] Filing Date: 11/12/2007** **[30] Priority:** **[31] Priority No. [32] Priority date [33] State** **60/877,080 22/12/2006 USA** **[72] Inventors: 1- H Mc C. James، 2- John P. Dever، 3- William C. Hoffman** **[73] Owner: Dow Global Technologies Inc., Washington Street, Building 1790, Midland, , Michigan, 48674, USA** **[74] Agent: Saud M. A. Shawwaf**	**[51] Int. Cl.[7]: C07C 29/10** **[56] Cited Documents:** **- US 5440058 A (UNION CARBIDE CHEMICALS & PLASTICS TECHNOLOGY CORPORATION) 08 August 1995** **Examiner: Abdallah Ibrahim AL-Khatib**

[54] PROCESS FOR PROCESSING ETHYLENE OXIDE STREAMS CONTAINING NOX OR ORGANIC NITROGEN COMPOUNDS

[57] Abstract: Crude Aqueous alkylene oxide streams are converted to the corresponding alkylene glycol. The crude alkylene oxide stream contains NOx or organic nitrogen compounds. The hydrolysis reaction is conducted in the presence of water-soluble reducing agents, of which an alkali metal bisulfite id a preferred type.

No. of claims: 19

Note: Any interested individual may, within 3 months of publication of the grant, file objection thereof with the Grievance Committee after payment of grievance fees.

(19) pATENT OFFICE OF THE COOPERATION COUNCL FOR THE ARAB STATES OF THE GULF

(19) مكتب براءات الاختراع لمجلس التعاون لدول الخليج العربية

[12] **Patent**

[11] Patent No.: GC0001686 **[45] Date of Publishing the Grant of the Patent: 31/03/2012 17/2012**	**Number of the Decision to Grant the Patent: 11/26939** **Date of the Decision to Grant the Patent: 12/09/2011**
[21] Application No.: GCC/P/2007/9494 **[22] Filing Date: 14/11/2007** **[30] Priority:** **[31] Priority No. [32] Priority date [33] State** **60/859,738 17/11/2006 US**	**[51] Int. Cl.[7]: B01J 23/52, 23/66, 29/89, 31/24, 23/48, 23/54, 29/00, 31/16; C07D 301/10, 301/00** **[56] Cited Documents:** **- US 2004/180787 A1 (ROLISON DEBRA [US] et al.) 16 September 2004**
[72] Inventors: 1- David L. Trent، 2- Larry N. Ito، 3- Heiko Weiner، 4- Robert G. Bowman ،5- Keith J. Watson، 6- Sandeep S. Dhingra، 7- Rick C. Schroden، 8- David G. Barton **[73] Owner: Dow Global Technologies Inc., Washington Street, 1790 Building, Midland, Michigan 48674, USA** **[74] Agent: Saud M. A. Shawwaf**	**Examiner: Abdallah Ibrahim AL-Khatib**

[54] HYDRO-OXIDATION PROCESS USING A CATALYST PREPARED FROM A GOLD CLUSTER COMPLEX

[57] Abstract: A process and catalyst for the hydro-oxidation of an olefin having three or more carbon atoms, such as propylene, to form an olefin oxide, such as propylene oxide. The process involves contacting the olefin with oxygen in the presence of hydrogen and a hydro-oxidation catalyst under reaction conditions; the catalyst comprising gold nanoparticles deposited on a nanoporous titanium-containing support, prepared by depositing a gold-ligand cluster complex onto the support to form a catalyst precursor, and then heating and/or chemically treating the catalyst precursor to form the hydro-oxidation catalyst composition. The hydro-oxidation catalyst exhibits stabilized catalyst activity, enhanced lifetime, and improved hydrogen efficiency

No. of claims: 21 **No. of figures: 19**

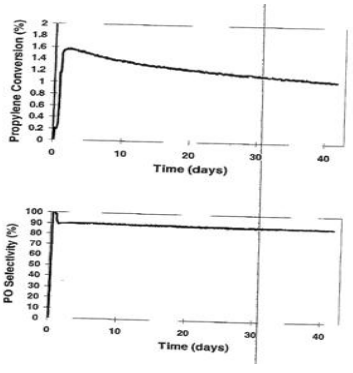

Note: Any interested individual may, within 3 months of publication of the grant, file objection thereof with the Grievance Committee after payment of grievance fees.

(19) pATENT OFFICE OF THE COOPERATION COUNCL FOR THE ARAB STATES OF THE GULF

(19) مكتب براءات الاختراع لمجلس التعاون لدول الخليج العربية

[12] **Patent**

[11] Patent No.: GC0001687 **[45] Date of Publishing the Grant of the Patent: 31/03/2012 17/2012**	**Number of the Decision to Grant the Patent: 11/26947** **Date of the Decision to Grant the Patent: 12/09/2011**
[21] Application No.: GCC/P/2004/3776 **[22] Filing Date: 04/09/2004** **[30] Priority:** **[31] Priority No. [32] Priority date [33] State** **10/657,057 05/09/2003 US**	**[51] Int. Cl.[7]: B01J 29/06, 29/85, 37/00; C07C 1/20; C10G 3/00** **[56] Cited Documents:** **- WO 03/000413 A (EXXONMOBIL CHEM PATENTS INC) 03 January 2003**
[72] Inventors: 1- Stephen N. Vaughn، 2- Richard B. Hall، 3- Jack W. Johnson، 4- Kenneth R. Clem، 5- Teng Xu **[73] Owner: Exxonmobil Chemical Patents Inc., 5200 Bayway Drive, Baytown, Texas, 77520, USA** **[74] Agent: Saud M. A. Shawwaf**	**Examiner: Fahed Zoaid AlMutairi**

[54] LOW METAL CONTENT CATALYST COMPOSITIONS AND PROCESSES FOR MAKING AND USING SAME

[57] Abstract: The invention provides low metal content molecular sieve catalyst compositions, processes for making such catalysts, and processes for using such catalysts in the conversion of an oxygenate into one or more light olefins. Preferably, the catalyst composition comprises a matrix material having a low metal content. By utilizing matrix materials having low metal contents, the amount of metal-catalyzed side reaction byproducts formed in a reaction system, particularly in an oxygenate-to-olefin reaction system, can be advantageously reduced.

No. of claims: 20

Note: Any interested individual may, within 3 months of publication of the grant, file objection thereof with the Grievance Committee after payment of grievance fees.

(19) pATENT OFFICE OF THE COOPERATION COUNCL FOR THE ARAB STATES OF THE GULF

(19) مكتب براءات الاختراع لمجلس التعاون لدول الخليج العربية

[12] **Patent**

[11] Patent No.: GC0001688 **[45] Date of Publishing the Grant of the Patent: 31/03/2012 17/2012**	**Number of the Decision to Grant the Patent: 11/26957** **Date of the Decision to Grant the Patent: 12/09/2011**
[21] Application No.: GCC/P/2003/3089 **[22] Filing Date: 13/12/2003** **[30] Priority:** **[31] Priority No. [32] Priority date [33] State** **10/321,215 17/12/2002 US**	**[51] Int. Cl.[7]: C07C 11/02, 1/120, 31/04** **[56] Cited Documents:** **- US 2321748 A (HOPKINS J. H. et al.) 15 June 1943** **- DE 2809082 A (STONE & WEBSTER ENGINEERING CORP) 16 November 1978** **- WO 02/32836 A1 (EXXONMOBIL CHEMICAL PATENTS INC) 25 April 2002** **- US 5714662 A 27 April 2001** **- WO 00/49106 A1 24 August 2000** **- US 6121504 A 15 May 2004** **- US 6137022 A 12 January 2006** **- WO 02/26676 A2 04 April 2002** **Examiner: Bander M. Al-Thobity**
[72] Inventors: 1- Teng Xu، 2- Marcel Janssen، 3- Cor F. Van Egmond **[73] Owner: Exxonmobil Chemical Patents Inc. Bayway Drive 5200, Baytown ,77520 ,Texas, USA** **[74] Agent: Saud M. A. Shawwaf**	

[54] METHANOL FEED FOR PRODUCING OLEFIN STREAMS

[57] Abstract: This invention provides a methanol composition, a method of making the composition, and a method of using the composition. The methanol composition of this invention is supplemented with certain additional alcohols and/or aldehydes, and serves as a particularly desirable feed stream for use in the manufacture of olefins such as ethylene and propylene. Such feed streams result in increased production of ethylene or in the increased production of both ethylene and propylene.

No. of claims: 36

Note: Any interested individual may, within 3 months of publication of the grant, file objection thereof with the Grievance Committee after payment of grievance fees.

(19) pATENT OFFICE OF THE COOPERATION COUNCL FOR THE ARAB STATES OF THE GULF

(19) مكتب براءات الاختراع لمجلس التعاون لدول الخليج العربية

[12] **Patent**

[11] Patent No.: GC0001689 **[45] Date of Publishing the Grant of the Patent: 31/03/2012 17/2012**	**Number of the Decision to Grant the Patent: 11/26953** **Date of the Decision to Grant the Patent: 12/09/2011**
[21] Application No.: GCC/P/2007/9372 **[22] Filing Date: 30/10/2007** **[30] Priority:** **[31] Priority No. [32] Priority date [33] State** **60/927,176 02/05/2007 US**	**[51] Int. Cl.[7]:C08L 23/02; C08F 255/02; C08F 2/34; C08F 297/00** **[56] Cited Documents:** **- WO 01/62847 A (BOREALIS TECH OY [FI]; VAEHAELAE MARTTI [FI]; SALMINEN HANNU [FI] ; LEH) 30 August 2001** **- GB 1206795 A (UNION CARBIDE CORP [US]) 30 September 1970** **- GB 1205635A (ICE LTD [GB]) 16 September 1970** **- US 4485217 A (GUNTER HARVEY R [US] et al.) 27 November 1984**
[72] Inventors: 1- Dale M. Elley-Bristow، 2- Stephanie M. Whited، 3- Nathan J. Wiker، 4- William J. Michie **[73] Owner: Dow Global Technologies Inc. Washington Street, 1790 Building, Midland 48674,Michigan ,USA** **[74] Agent: Saud M. A. Shawwaf**	**Examiner: Mohammad Al-Ismael**

[54] HIGH-DENSITY POLYETHYLENE COMPOSITIONS, METHOD OF MAKING THE SAME, INJECTION MOLDED ARTICLES MADE THEREFROM, AND METHOD OF MAKING SUCH ARTICLES

[57] Abstract: **The instant invention is a high-density polyethylene composition, method of producing the same, injection molded articles made therefrom, and method of making such articles. The high-density polyethylene composition of the instant invention includes a first component, and a second component. The first component is a high molecular weight ethylene alpha-olefin copolymer having a density in the range of 0.920 to 0.946 g/cm3, and a melt index (I21.6) in the range of 1 to 15 g/10 minutes. The second component is a low molecular weight ethylene polymer having a density in the range of 0.965 to 0.980 g/cm3, and a melt index (I2) in the range of 30 to 1500 g/10 minutes. The high-density polyethylene composition has a melt index (I2) of at least 1, a density in the range of 0.950 to 0.960 g/cm3. The method of producing a high-density polyethylene composition includes the following steps: (1) introducing ethylene, and one or more alpha-olefin comonomers into a first reactor; (2) (co)polymerizing the ethylene in the presence of one or more alpha-olefin comonomers in the first reactor thereby producing a first component, wherein the first component being a high molecular weight ethylene alpha-olefin copolymer having a density in the range of 0.920 to 0.946 g/cm3, and a melt index (I21.6) in the range of 1 to 15 g/10 minutes; (3) introducing the first component and additional ethylene into a second reactor; (4) polymerizing the additional ethylene in the second reactor thereby producing a second component, wherein the second component being a low molecular weight ethylene polymer having a density in the range of 0.965 to 0.980 g/cm3, and a melt index (I2) in the range of 30 to 1500 g/10 minutes; and (5) thereby producing the high-density polyethylene composition, wherein the high-density polyethylene composition having a melt index (I2) of at least 1, a density in the range of 0.950 to 0.960 g/cm3. The injection molded articles according to instant invention comprise the above-described inventive high-density polyethylene composition , and such articles are made via injection molding.**

No. of claims: 47 No. of figures: 7

Note: Any interested individual may, within 3 months of publication of the grant, file objection thereof with the Grievance Committee after payment of grievance fees.

(19) pATENT OFFICE OF THE COOPERATION COUNCL FOR THE ARAB STATES OF THE GULF

(19) مكتب براءات الاختراع لمجلس التعاون لدول الخليج العربية

[12] **Patent**

[11] Patent No.: GC0001690 **[45] Date of Publishing the Grant of the Patent: 31/03/2012 17/2012**	**Number of the Decision to Grant the Patent: 11/26961** **Date of the Decision to Grant the Patent: 12/09/2011**
[21] Application No.: GCC/P/2004/3830 **[22] Filing Date: 21/09/2004** **[30] Priority:** **[31] Priority No. [32] Priority date [33] State** **60/505,330 23/09/2003 US** **[72] Inventors: 1- Richard E. Campbell, Jr، 2- Robert N. Reib، 3- Linfeng Chen، 4- Michael W. Tilston، 5- Roger B. Painter** **[73] Owner: Dow Global Technologies Inc., Washington Street,Building 1790 , 48674 Midland,Michigan , USA** **[74] Agent: Saud M. A. Shawwaf**	**[51] Int. Cl.[7]: C08F 110/02; C08F2/00; C08F 2/34** **[56] Cited Documents:** **- US 6306658 B1 (VAN BEEK JOHANNES A M et al.) 23 October 2001** **Examiner: Bander M. Al-Thobity**

[54] CATALYST COMPOSITION FOR ETHYLENE POLYMERIZATION

[57] Abstract: A process for the polymerization of olefin monomers comprising contacting ethylene or a mixture of ethylene and one or more C4-8 alpha olefins with a catalyst composition comprising one or more Group 3-10 transition metal containing, Ziegler-Natta, procatalyst compounds; one or more alkylaluminum cocatalyts; and one or more polymerization control agents, said process being characterized in that at least one such polymerization control agent is an alkyl or aryl. ester of an aliphatic or aromatic (poly)carboxylic acid optionally containing one or more substituents comprising a Group 13, 14, 15, or 16 heteroatom.

No. of claims: 15 No. of figures: 1

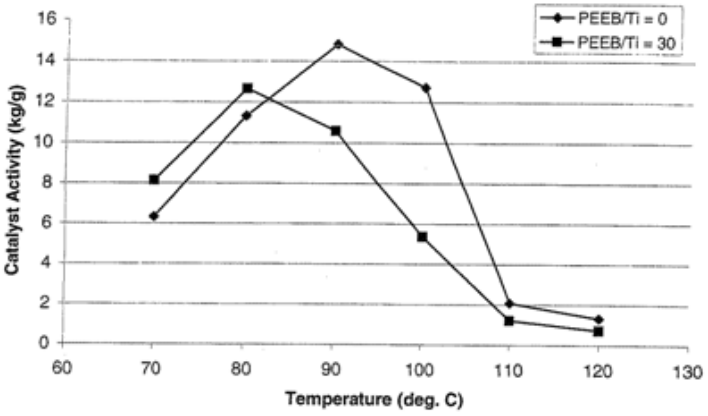

Note: Any interested individual may, within 3 months of publication of the grant, file objection thereof with the Grievance Committee after payment of grievance fees.

[12] Patent

[11] Patent No.: GC0001691 **[45] Date of Publishing the Grant of the Patent: 31/03/2012 17/2012**	**Number of the Decision to Grant the Patent: 11/25712** **Date of the Decision to Grant the Patent: 11/07/2011**
[21] Application No.: GCC/P/2005/5066 **[22] Filing Date: 22/08/2005** **[30] Priority:** **[31] Priority No. [32] Priority date [33] State** **4658 14/05/2005 GCC** **[72] Inventor: Rongjia Tao* Xiaogun Xu** **[73] Owner: Temple University of The Commonwealth system of Higher Education., Of The Commonwealth System of Higher Education Broad Street and Montgomery Avenue, Philadelphia ,USA** **[74] Agent: Suleiman I. Al-Ammar**	**[51] Int. Cl.[7]: C10G 32/02; F02M 27/04; G05D 24/00; C10G 32/00** **[56] Cited Documents:** **- CA 2243886A (FORREST SCIENT RES [NZ]) 28 January 1999** **- EP 0766000A2 (AKIRA HASHIMOTO [JP]) 02 April 1997** **- US 6056872 A(MAGNETIZER GROUP INC [US]) 2 May 2000** **- US 4188296A (FUJITA ETUO) 12 February 1980** **Examiner: Ahmed Saleem Al- Hinai**

[54] METHOD AND APPARATUS FOR TREATMENT OF A FLUID

[57] Abstract: An apparatus for the magnetic treatment of a fluid which produces at least one magnetic field for a period of time, T_c at or above a critical magnetic field strength, H_c, the period T_c and the field strength H_c determined relative to one another and dependent upon the properties of the fluid.

No. of claims: 10 No. of figures: 4

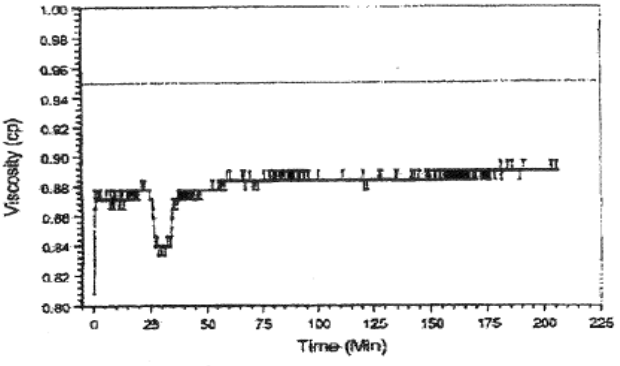

Note: Any interested individual may, within 3 months of publication of the grant, file objection thereof with the Grievance Committee after payment of grievance fees.

(19) pATENT OFFICE OF THE COOPERATION COUNCL FOR THE ARAB STATES OF THE GULF

(19) مكتب براءات الاختراع لمجلس التعاون لدول الخليج العربية

[12] **Patent**

[11] Patent No.: GC0001692 **[45] Date of Publishing the Grant of the Patent: 31/03/2012 17/2012**	**Number of the Decision to Grant the Patent: 11/25858** **Date of the Decision to Grant the Patent: 16/07/2011**
[21] Application No.: GCC/P/2006/6747 **[22] Filing Date: 08/08/2006** **[30] Priority:** **[31] Priority No. [32] Priority date [33] State** **MI2005A001559OF 08/10/2005 IT**	**[51] Int. Cl.[7]: C09K 8/52, 8/62, 8/68** **[56] Cited Documents:** **- US 4609457 A (HALLIBURTON COMPANY) 02 September 1986** **- EP 0672740 A1 (TEXAS UNITED CHEMICAL COMPANY) 20 September 1995** **- EP 0559418 A2 (TEXAS UNITED CHEMICAL CORPORATION) 8 September 1993** **- US 6131661 A (TETRA TECHNOLOGIES INC) 17 October 2000**
[72] Inventors: 1- Sandra Cobianco، 2- Cristina Tonini، 3- Marco Ricci، 4- Rino D Aloisio، 5- Rossella Bortolo، 6- Daniele Bianchi، 7- Roberto TASSINARI **[73] Owners: 1- Polimeri Europa S.p.A. .Via E Brindisi ،4Fermi ,Italy, 2- ENI S.p.A.,Piazzale ،-1Mattei .E, Italy** **[74] Agent: Suleiman I. Al-Ammar**	**Examiner: Ahmed Saleem Al- Hinai**

[54] PROCESS FOR THE REMOVAL OF FILTERCAKES IN OIL WELLS

[57] Abstract: Process for the solubilization of polymeric material deposited on a porous medium, which comprises putting said polymeric material in contact with an aqueous composition comprising
(a) a catalyst selected from
(a1) a complex having general formula(I)

$$Fe^{++}(L)n(Y)s \quad (I)$$

L being a binder selected from those having general formula



(II)
wherein X = CH, N
(a2) a hydrosoluble coba.Lt'" salt, preferably cobalt acetate
(b) an oxidizing agent selected from:
(b1) hydrogen peroxide,
(b2) MHSOs, wherein M is an alkaline metal, preferably potassium;
with the constraint that the catalyst (al) can only be used in the presence of the oxidizing agent (bl) and the catalyst (a2) can only be used in the presence of the catalyst (b2).

No. of claims: 13

Note: Any interested individual may, within 3 months of publication of the grant, file objection thereof with the Grievance Committee after payment of grievance fees.

(19) pATENT OFFICE OF THE COOPERATION COUNCL FOR THE ARAB STATES OF THE GULF

(19) مكتب براءات الاختراع لمجلس التعاون لدول الخليج العربية

[12] Patent

[11] Patent No.: GC0001693 **[45] Date of Publishing the Grant of the Patent: 31/03/2012 17/2012**	**Number of the Decision to Grant the Patent: 11/25706** **Date of the Decision to Grant the Patent: 11/07/2011**
[21] Application No.: GCC/P/2003/2711 **[22] Filing Date: 11/06/2003** **[30] Priority:** **[31] Priority No. [32] Priority date [33] State** **10/177,815 2005/06/20 US** **[72] Inventors: 1- Jesse Lee، 2- Erik Nelson** **[73] Owner: Schlumberger Technology B.V., Parkstraat 83-89, 2514 JG, The Hauge, The Netherlands** **[74] Agent: Suleiman I. Al-Ammar**	**[51] Int. Cl.[7]: C09K 8/68; E21B 43/04** **[56] Cited Documents:** **- US 4741401 A (WILLIAMSON TREVOR D et al.) 03 May 1988** **- EP 0275624 A (PETROLITE CORP) 27 July 1988** **- US 3958638 A (JOHNSTON CHESTER C) 25 May 1976** **- US 4036401 A (NACHTIGALL JR WALTER E) 19 July 1977** **Examiner: Ahmed Saleem Al- Hinai**

[54] METHOD FOR TREATING SUBTERRANEAN FORMATION

[57] Abstract: It has been found that a large variety of solid chemicals available in a bulk powder form could be added to subterranean treatment fluids with delayed release when said chemicals are delivered as capsules consisting of encapsulated granulates obtained by aggregating the bulk powder under pressure to form a densified material and optionally, dry comminuting said densified material to produce granulates at the desired size. The invention is particularly useful for delivering new types of breaking agents for stimulation fluids or additives for wellbore cementing.

No. of claims: 16 No. of figures: 2

Note: Any interested individual may, within 3 months of publication of the grant, file objection thereof with the Grievance Committee after payment of grievance fees.

(19) pATENT OFFICE OF THE COOPERATION COUNCL FOR THE ARAB STATES OF THE GULF

(19) مكتب براءات الاختراع لمجلس التعاون لدول الخليج العربية

[12] **Patent**

[11] Patent No.: GC0001694 **[45] Date of Publishing the Grant of the Patent: 31/03/2012 17/2012**	**Number of the Decision to Grant the Patent: 11/25709** **Date of the Decision to Grant the Patent: 11/07/2011**
[21] Application No.: GCC/P/2003/2714 **[22] Filing Date: 15/06/2003** **[30] Priority:** **[31] Priority No. [32] Priority date [33] State** **10/191,179 09/07/2002 US** **[72] Inventors: 1- Frank Chang، 2- Diankui Fu** **[73] Owner: Schlumberger Technology B.V., Parkstraat 83-89, 2514 JG, The Hauge, The Netherlands** **[74] Agent: Suleiman I. Al-Ammar**	**[51] Int. Cl.[7]: E21B 43/00; E21B 43/22** **[56] Cited Documents:** **- US 5979557 A (CHANG FRANK F et al.) 09 November 1999** **- WO 0129369 A (SCHLUMBERGER TECHNOLOGY CORP) 26 April 2001** **- US 6399546 B1 (CHANG FRANK F ET AL) 04 June 2002** **- US 6258859 B1 (LI RUOXIN et al.) 10 July 2001** **Examiner: Ahmed Saleem Al- Hinai**

[54] COMPOSITIONS AND METHODS FOR TREATING A SUBTERRANEAN FORMATION

[57] Abstract: A method is provided for diverting the majority of the fluid injected into a stratified subterranean formation, that has at least one problematic zone and at least one hydrocarbon zone, into the hydrocarbon zone. In the method, a viscous diverting fluid made with a gelling amount of a surfactant and an acid is injected before the main treatment; after the treatment the acid decomposes the surfactant. The main treatment may be hydraulic fracturing, acid fracturing and matrix acidizing. The fluid used as the diverting fluid may also be used as the carrier fluid in hydraulic fracturing or gravel packing. Destruction of the surfactant alleviates the potential of diverters or carrier fluids to damage formations.

No. of claims: 17 No. of figures: 4

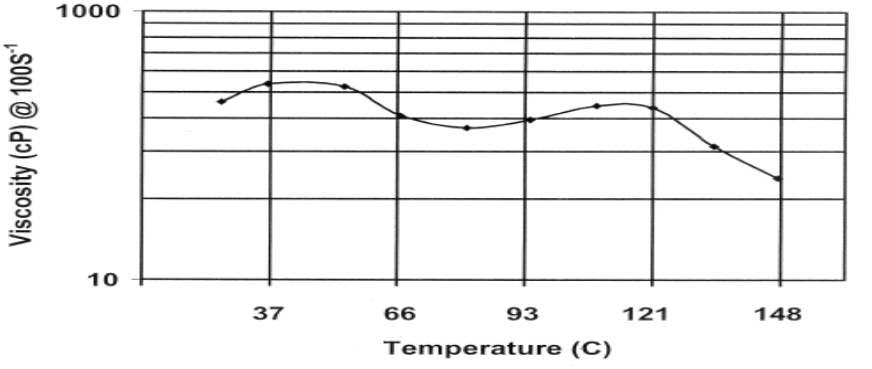

Note: Any interested individual may, within 3 months of publication of the grant, file objection thereof with the Grievance Committee after payment of grievance fees.

(19) pATENT OFFICE OF THE COOPERATION COUNCL FOR THE ARAB STATES OF THE GULF

(19) مكتب براءات الاختراع لمجلس التعاون لدول الخليج العربية

[12] **Patent**

[11] Patent No.: GC0001695 **[45] Date of Publishing the Grant of the Patent: 31/03/2012 17/2012**	**Number of the Decision to Grant the Patent: 11/27739** **Date of the Decision to Grant the Patent: 28/09/2011**
[21] Application No.: GCC/P/2005/5264 **[22] Filing Date: 15/10/2005** **[30] Priority:** **[31] Priority No. [32] Priority date [33] State** **60/619,383 15/10/2004 US** **[72] Inventors: 1- Mark E. Ehrhardt، 2- William S. Mathews، 3- W. Brett Wilson، 4- Dawn Rymer** **[73] Owner: ExxonMobil Upstream Research Company, P.O.BOX 2189, Houston, 2489,77252,Texas, USA** **[74] Agent: Saud M. A. Shawwaf**	**[51] Int. Cl.^{7}:B65B 1/04** **[56] Cited Documents:** **- US 5983931 A (INGEBRIGTSEN et al.) 16 November 1999** **- US 6003603 A (BREIVIK et al.) 21 December 1999** **Examiner: Fahad M. al-Baker**

[54] SUBSEA CRYOGENIC FLUID TRANSFER SYSTEM

[57] Abstract: The current invention includes to systems and methods of transferring cryogenic fluids between two locations. More particularly, some embodiments of the invention are related to systems and methods of using cryogenic risers and rotatable connections for transferring cryogenic fluids, including liquefied natural gas, from an ocean going vessel to a second location. One embodiment of the invention includes a system for transporting a cryogenic fluid between a floating vessel and a second location. The system including a cryogenic riser, a submersible turret connector. The being riser adapted to allow the vertical position of the first end of the riser to be changed, the second end of the first riser located in a body of water and in fluid communication with the second location. The submersible turret connector connected to the first end of the first riser. The first connector adapted for releasably connecting to a first floating vessel located on the body of water so that a cryogenic fluid can be communicated between the first vessel and the first end of the first riser, the first connector being moored to the bottom of the body of water such that the vertical position of the first connector can be changed, and the first connector adapted to allow the first vessel to rotate around the first connector upon the surface of the body of water while the first vessel is connected to the first connector.

No. of claims: 80 No. of figures: 9

Note: Any interested individual may, within 3 months of publication of the grant, file objection thereof with the Grievance Committee after payment of grievance fees.

(19) pATENT OFFICE OF THE COOPERATION COUNCL FOR THE ARAB STATES OF THE GULF

(19) مكتب براءات الاختراع لمجلس التعاون لدول الخليج العربية

[12] **Patent**

[11] Patent No.: GC0001696 **[45] Date of Publishing the Grant of the Patent: 31/03/2012 17/2012**	**Number of the Decision to Grant the Patent: 11/28222** **Date of the Decision to Grant the Patent: 06/10/2011**
[21] Application No.: GCC/P/2005/5050 **[22] Filing Date: 17/08/2005** **[30] Priority:** **[31] Priority No. [32] Priority date [33] State** **0418581.5 2004/8/20 GB**	**[51] Int. Cl.[7]: C08J 5/18, 23/04; C08F 10/00** **[56] Cited Documents:** **- US 6316546 B1 (ONG S. CHRISTINE et al.) 13 November 2001** **- US 6455642 B1 (MYHRE OLE JAN et al.) 24 September 2002** **- EP 1333044 A1 (BOREALIS TECHNOLOGY OY) 06 August 2003**
[72] Inventors: 1- Choon Kooi Chai،2- John Amos،3- Luc Marie Ghislain Dheur **[73] Owner: Innovene Manufacturing Belgium Nv, Scheldelaan 482, B-2040 Antwerpen, Belgium** **[74] Agent: Dr. Hassan AlMulla**	**Examiner: Yahiya Naser Al-BuSafi**

[54] FILMS MADE FROM ETHYLENE POLYMER COMPOSITIONS AND PROCESSES FOR MAKING SUCH POLYMERS AND FILMS

[57] Abstract: Film formed from a polyethylene resin composition which obeys a dynamic rheological relationship at 190°C between melt storage modulus G', measured in Pa and at a dynamic frequency where the loss modulus G'' = 3000Pa, and dynamic complex viscosity η^*_{100}, measured in Pa.s at 100 rad/s, such that (a) G'(G'' = 3000) > -0.86η^*_{100} + z where z = 3800, and at the same time (b) G'(G'' = 3000) > 0.875η^*_{100} – y where y = 650, and having an impact strength (DDT) of at least 250 g, measured on 15µm thick film (blown under conditions with BUR = 5:1 and Neck Height = 8 x D) conditioned for 48 hours at 20° – 25°C, according to ASTM D1709.

No. of claims: 19 No. of figures: 1

Note: Any interested individual may, within 3 months of publication of the grant, file objection thereof with the Grievance Committee after payment of grievance fees.

(19) pATENT OFFICE OF THE COOPERATION COUNCL FOR THE ARAB STATES OF THE GULF

(19) مكتب براءات الاختراع لمجلس التعاون لدول الخليج العربية

[12] **Patent**

[11] Patent No.: GC0001697 **[45] Date of Publishing the Grant of the Patent: 31/03/2012 17/2012**	**Number of the Decision to Grant the Patent: 11/27752** **Date of the Decision to Grant the Patent: 28/09/2011**
[21] Application No.: GCC/P/2004/3848 **[22] Filing Date: 29/09/2004** **[30] Priority:** **[31] Priority No. [32] Priority date [33] State** **60/580,729 03/10/2003 US** **10/723,389 25/11/2003 US** **[72] Inventors: 1- Bainian Qian، 2- Costas G. Gogos، 3- David B. Todd، 4- Thomas R. Veariel** **[73] Owner: Exxonmobil Chemical Patents Inc. Bayway Drive 5200,Baytown ,77520, Texas, USA** **[74] Agent: Saud M. A. Shawwaf**	**[51] Int. Cl.[7]: C08F 8/00; C08J 7/12** **[56] Cited Documents:** **- US 5611983 A (MA ET AL) 18 March 1997** **- US 6474969 B1 (K. READY) 05 November 2002** **- GB 1362145 A (MOBIL OIL CORPORATION) 30 July 1974** **Examiner: Abdulaziz S. AL-Motek**

[54] MELT FRACTURE REDUCTION

[57] Abstract: Melt fracture is reduced, without the necessity of polymer processing-aid additives specifically designed to alleviate exit region surface melt fracture phenomenon, by heating at least a portion of the die through which the polymer is extruded. The die exit region is maintained at a temperature above the bulk melt temperature of the polymer extruded through the die exit hole.

No. of claims: 23 No. of figures: 10

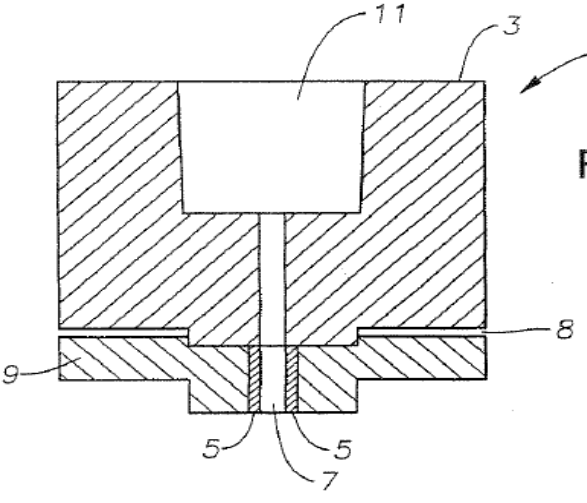

Fig. 1

Note: Any interested individual may, within 3 months of publication of the grant, file objection thereof with the Grievance Committee after payment of grievance fees.

(19) pATENT OFFICE OF THE COOPERATION COUNCL FOR THE ARAB STATES OF THE GULF

(19) مكتب براءات الاختراع لمجلس التعاون لدول الخليج العربية

[12] **Patent**

[11] Patent No.: GC0001698 **[45] Date of Publishing the Grant of the Patent: 31/03/2012 17/2012**	**Number of the Decision to Grant the Patent: 11/26943** **Date of the Decision to Grant the Patent: 12/09/2011**
[21] Application No.: GCC/P/2006/6406 **[22] Filing Date: 11/06/2006** **[30] Priority:** **[31] Priority No. [32] Priority date [33] State** **102005028665.8 15/06/2005 DE** **[72] Inventors: 1- Christoph Neumuller، 2- Wolfgang Ruech، 3- Dr. Thomas Wallek** **[73] Owner: AMI Agrolinz Melamine International GmbH, St.-Peter-StraBe 25, A-4021, Linz, Austria** **[74] Agent: Saud M. A. Shawwaf**	**[51] Int. Cl.[7]: C02F 1/04, 1/20, 101/38, 101/16, 103/36; C07D 251/60** **[56] Cited Documents:** **- DE 10229103 A1 (AGROLINZ MELAMIN GMBH, LINZ) 15 January 2004** **- WO 01/46159 A (EUROTECNICA DEVELOPMENT & LICENSING S.R.L; NOE`, SERGIO; PARMEGIANI, M) 28 June 2001** **- WO 02/081379 A (HANWHA CHEMICAL CORPORATION; HAN JOO-HEE; NOH, MIN- JEONG; CHOI, YOUNG) 17 October 2002** **- US 4013757 A (BEKOWITZ et al) 22 March 1977** **- DE 1930844 A1 (ALLIED CHEMICAL CORP) 25 January 1970** **Examiner: Abdallah Ibrahim AL-Khatib**

[54] PROCESS FOR CLEANING WASTEWATERS FROM MELAMINE PLANTS

[57] Abstract: The invention relates to a process for cleaning wastewaters of a melamine plant, characterized in that

-triazine-containing wastewater is subjected to a thermal pretreatment stage, then

-the vapours from the gas phase of the thermal pretreatment stage are condensed, and

-the liquid phase of the thermal pretreatment stage is subjected to a thermal hydrolysis stage and NH_3 is removed from the resulting H_2O-, CO_2- and NH_3-containing liquid phase. This makes it possible to compensate for varying wastewater qualities, so that a constant and safe operating mode of the melamine and wastewater plant is possible. Moreover, the thermal pretreatment stage of the process according to the invention deburdens the downstream thermal hydrolysis stage.

Fig. 1

No. of claims: 21 No. of figures: 1

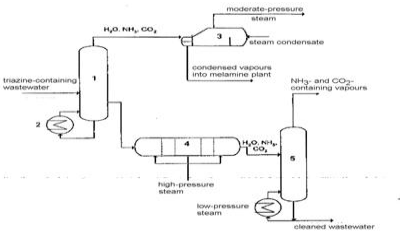

Note: Any interested individual may, within 3 months of publication of the grant, file objection thereof with the Grievance Committee after payment of grievance fees.

(19) pATENT OFFICE OF THE COOPERATION COUNCL FOR THE ARAB STATES OF THE GULF

(19) مكتب براءات الاختراع لمجلس التعاون لدول الخليج العربية

[12] **Patent**

[11] Patent No.: GC0001699 **[45] Date of Publishing the Grant of the Patent: 31/03/2012 17/2012**	**Number of the Decision to Grant the Patent: 11/27468** **Date of the Decision to Grant the Patent: 15/09/2011**
[21] Application No.: GCC/P/2005/5134 **[22] Filing Date: 10/09/2005** **[30] Priority:** **[31] Priority No. [32] Priority date [33] State** **60/607,970 08/09/2004 US** **[72] Inventors: 1- Douglas B. Swift، 2- Sovani Meksvanh، 3- Ronald P. Whelan** **[73] Owners: 1- Douglas B. Swift، 2823 ,Moss Avenue, Midland, Texas 79705 USA, 2- Ronald P. Whelan 8108 , Ivnerness Ridge Rode ,Potomac, Maryland 20854, USA, 3- Sovani Meksvanh, 2635 Holman Avenue, Silver Spring, Maryland 20910 ,USA** **[74] Agent: Saud M. A. Shawwaf**	**[51] Int. Cl.[7]: F24J 3/08; E21B 43/24** **[56] Cited Documents:** **- US 3931851 A (HARRIS et al.) 13 January 1976** **- JP 2002263634 A (TOSHIBA ENG CO LTD) 17 September 2002** **Examiner: Mohammed A. Aljaffar**

[54] SOLAR AUGMENTED GEOTHERMAL ENERGY

[57] Abstract: An apparatus and a method is disclosed for storage of solar energy in a subsurface geologic reservoir. The method includes transferring concentrated solar thermal energy to a fluid, thereby generating a supercritical fluid. The supercritical fluid is then injected into the subsurface geologic reservoir through at least one injection well (4), The subsurface geologic reservoir may be a highly permeable and porous sedimentary strata (8), a depleted hydrocarbon field, a depleting hydrocarbon field, a depleted oil field (5), a depleting oil field (5), a depleted gas field (7), or a depleting gas field. Once charged with the supercritical fluid, the subsurface geologic formation forms a synthetic geothermal reservoir.

No. of claims: 26 No. of figures: 2

Note: Any interested individual may, within 3 months of publication of the grant, file objection thereof with the Grievance Committee after payment of grievance fees.

(19) pATENT OFFICE OF THE COOPERATION COUNCL FOR THE ARAB STATES OF THE GULF

(19) مكتب براءات الاختراع لمجلس التعاون لدول الخليج العربية

[12] **Patent**

[11] Patent No.: GC0001700 **[45] Date of Publishing the Grant of the Patent: 31/03/2012 17/2012**	**Number of the Decision to Grant the Patent: 11/28224** **Date of the Decision to Grant the Patent: 06/10/2011**
[21] Application No.: GCC/P/2006/5737 **[22] Filing Date: 29/01/2006** **[30] Priority:** **[31] Priority No. [32] Priority date [33] State** **11/048,833 2005/2/2 US** **[72] Inventors: 1- marcus P Heydrich، 2- peter jackson، 3- karen Schnuelle** **[73] Owner: Shaw Cor Ltd, 25 Bethridge Road, Toronto, Ontario, M9W, 1M7, Canada** **[74] Agent: Ali Al-Swilliam**	**[51]Int. Cl.[7]: C08L 23/00, 23/10, 23/16** **[56] Cited Documents:** **- WO 02/32983 A (SHAWCOR LTD; JACKSON, PETER; HEYDRICH, MARCUS, P) 25 April 2002** **- US 6569915 B1 (JACKSON PETER et al.) 27 May 2003** **- US 4302 557 A (YOSHIMURA et al.) 24 November 1981** **Examiner: Yahiya Naser Al-BuSafi**

[54] RADIATION-CROSSLINKED POLYOLEFIN COMPOSITIONS

[57] Abstract: An article suitable for use as an insulating or coating material comprises a radiation-crosslinked composition comprising a polyethylene, a polypropylene and optionally an ethylene-propylene elastomer. The polyethylene component is selected from high density polyethylene (HDPE), medium density polyethylene (MDPE) and linear medium density polyethylene (LMDPE) and the polypropylene component is either a homopolymer or copolymer. The composition is predominantly based on the polyethylene component and contains the polyethylene component in an amount of at least 50 percent by weight. The article is radiation-crosslinked to a sufficient degree that it possesses thermoset properties, such that when the article is heated to a temperature above the crystalline melting point of the polypropylene homopolymer or copolymer, it is softened but does not become liquid. The article is formed by first blending the polyethylene, polypropylene and optionally the ethylene-propylene elastomer, melt processing the blend to produce an article, crosslinking the article by exposing it to radiation, and optionally heating, stretching and cooling the article to impart heat shrinkability to the article.

No. of claims: 30

Note: Any interested individual may, within 3 months of publication of the grant, file objection thereof with the Grievance Committee after payment of grievance fees.

(19) pATENT OFFICE OF THE COOPERATION COUNCL FOR THE ARAB STATES OF THE GULF

(19) مكتب براءات الاختراع لمجلس التعاون لدول الخليج العربية

[12] **Patent**

[11] Patent No.: GC0001701 **[45] Date of Publishing the Grant of the Patent: 31/03/2012 17/2012**	**Number of the Decision to Grant the Patent: 11/26826** **Date of the Decision to Grant the Patent: 11/09/2011**
[21] Application No.: GCC/P/2001/1529 **[22] Filing Date: 25/07/2001** **[30] Priority:** **[31] Priority No. [32] Priority date [33] State** **00116393,0 28/07/2000 EP** **[72] Inventors: 1- Paul Hadvary، 2- Hans Lengsfeld،3- Pierre Barbier** **[73] Owner: F. Hoffmann - La Roche Ag, 124 Grenzacherstrasse, Ch-4070, Basle, Switzerland** **[74] Agent: kadasa Law Firm**	**[51] Int. Cl.[7]: A61K 31/365,31/223,47/30; A61P 3/06** **[56] Cited Documents:** **- WO 00/13667 A1 (SMITHKLINE BEECHAM CORPORATION) 16 March 2000** **- US 5616570 A (LANGE L.G et al.) 01 April 1997** **- WO 99/34787 A2 (GELTEX PHARMACEUTICALS, INC.) 15 July 1999** **- US 4160826 A (FISCHETTI) 10 July 1979** **- US 5569452 A (AMIDON et al) 29 October 1996** **- US 5643874 A (BREMER et al.) 01 July 1997** **Examiner: Nouf Saleh Alnassban**

[54] A PHARMACEUTICAL COMPOSITION COMPRISING A LIPASE INHIBITOR

[57] Abstract: The present invention relates to pharmaceutical combinations, compositions and method for treating obesity, More particularly, the invention relates to a combination or composition comprising a lipase inhibitor, preferably orlistat and a bile acid sequestrant.

No. of claims: 25

Note: Any interested individual may, within 3 months of publication of the grant, file objection thereof with the Grievance Committee after payment of grievance fees.

(19) pATENT OFFICE OF THE COOPERATION COUNCL FOR THE ARAB STATES OF THE GULF

(19) مكتب براءات الاختراع لمجلس التعاون لدول الخليج العربية

[12] Patent

[11] Patent No.: GC0001702 **[45] Date of Publishing the Grant of the Patent: 31/03/2012 17/2012**	**Number of the Decision to Grant the Patent: 11/26832** **Date of the Decision to Grant the Patent: 11/09/2011**
[21] Application No.: GCC/P/2007/8702 **[22] Filing Date: 15/07/2007** **[72] Inventors: 1- Kazuhiro Onishi، 2- Budianto Bijanto، 3- Kazuo Tomoyasu، 4- Nobuhisa Miyake** **[73] Owner: Asahi Kasei Chemicals Corporation, 1-2, Yuraku- cho 1-chome, Chiyoda-ku, Tokyo 100-8440, Japan** **[74] Agent: Nassir Ali kadasa**	**[51] Int. Cl.[7]: B01D 53/14 ; C01B 31/20 ; C07C 68/04 ; C07C 69/96** **[56] Cited Documents:** **- WO 2995/000783 A1 (ASAHI KASEI CHEMICALS CORP) 06 January, 2005** **- JP 2001-247519 A (Director General of National Institute of Advanced Industrial Science and Technology) 11 September , 2001** **Examiner: Mohammad Al-Ismael**

[54] MIXTURE FOR RECOVERY UTILIZATION OR TRANSFER OF CARBON DIOXIDE

[57] Abstract: It is an object of the present invention to provide a mixture for recovery utilization or transfer of carbon dioxide gas. According to the present invention, disclosed is a mixture containing carbon dioxide and an alkyltin alkoxide composition containing carbon dioxide complex of an alkyltin alkoxide , the mixture having a composition with a specified ratio.

No. of claims: 24 No. of figures: 15

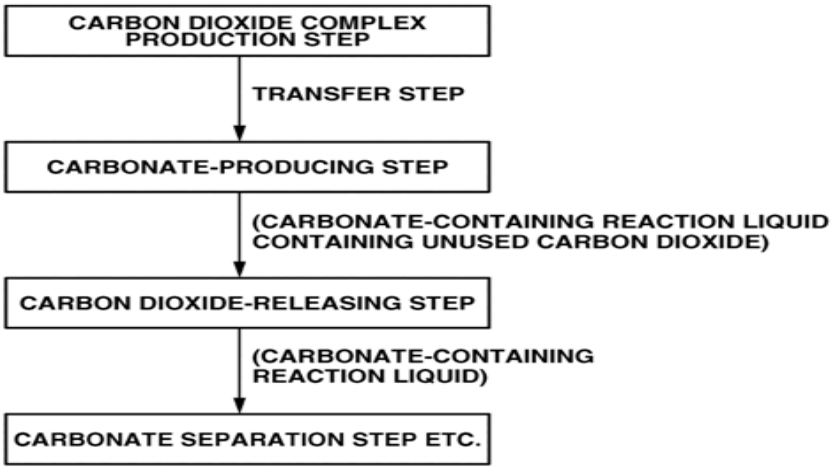

Note: Any interested individual may, within 3 months of publication of the grant, file objection thereof with the Grievance Committee after payment of grievance fees.

(19) pATENT OFFICE OF THE COOPERATION COUNCL FOR THE ARAB STATES OF THE GULF

(19) مكتب براءات الاختراع لمجلس التعاون لدول الخليج العربية

[12] **Patent**

[11] Patent No.: GC0001703 **[45] Date of Publishing the Grant of the Patent: 31/03/2012 17/2012**	**Number of the Decision to Grant the Patent: 11/26829** **Date of the Decision to Grant the Patent: 11/09/2011**
[21] Application No.: GCC/P/2007/8505 **[22] Filing Date: 13/06/2007** **[30] Priority:** **[31] Priority No. [32] Priority date [33] State** **06115444.9 14/06/2006 EP**	**[51] Int. Cl.[7]: C07C15/00, 15/04, 15/073, 2/64, 2/76, 2/78, 2/00** **[56] Cited Documents:** **- US 4822944 A(BRAZDIL JR JAMES F [US] et al.) 18 April 1989** **- US 5013334 A (MAURER RICHARD T [US]) 07 May 1991**
[72] Inventors: 1- Schwab, Ekkehard، 2- Schubert, Markus، 3- Muller, Ulrich، 4- Teich, Friedhelm، 5- Poplow, Frank، 6- Kieblich, Frank **[73] Owner: Basf Aktiengesellschaft, 67056 Ludwigshafen, Germany** **[74] Agent:Nasser Ali Kadasa**	**Examiner: Bander M. Al-Thobity**

[54] PROCESS FOR PREPARING UNSATURATED HYDROCARBONS

[57] Abstract: The present invention relates to a combined process for depleting or removing methane from a methane-containing gas mixture A and subsequent dehydrogenation, comprising the following steps 1) preparing a methane-enriched mixture B by contacting the methane-containing gas mixture A with at least one sorbent comprising a porous organometallic skeleton material, the skeleton material comprising at least one at least bidentate organic compound bound coordinatively to at least one metal ion; 2) preparing a methane-depleted gas mixture C by desorbing the compounds retained on the sorbent; 3) dehydrogenating aromatization of the saturated and unsaturated hydrocarbons present in mixture C or a portion thereof in the presence of a catalyst to aromatic hydrocarbons, to obtain a mixture D; 4) if appropriate separating the mixture D into a low boiler mixture E which comprises the majority of the H2 formed and of the unconverted hydrocarbons, and into at least one high boiler mixture F which comprises the majority of the aromatic hydrocarbons formed.

No. of claims: 11

Note: Any interested individual may, within 3 months of publication of the grant, file objection thereof with the Grievance Committee after payment of grievance fees.

(19) pATENT OFFICE OF THE
COOPERATION COUNCL FOR
THE ARAB STATES OF THE GULF

(19) مكتب براءات الاختراع
لمجلس التعاون لدول الخليج العربية

[12] **Patent**

[11] Patent No.: GC0001704 **[45] Date of Publishing the Grant of the Patent: 31/03/2012 17/2012**	**Number of the Decision to Grant the Patent: 11/27724** **Date of the Decision to Grant the Patent: 28/09/2011**
[21] Application No.: GCC/P/2006/7230 **[22] Filing Date: 15/11/2006** **[30] Priority:** **[31] Priority No. [32] Priority date [33] State** **MUM/2005/1426 16/11/2005 IN** **[72] Inventor: V.K.Wakchaure** **[73] Owner: CTR Manufacturing Industries Ltd** **[74] Agent: Kalil Ibrahim AL- nami**	**[51] Int. Cl.[7]: H01F 27/14; F16K 15/18** **[56] Cited Documents:** **- GB 525499 A (ASEA) 29 August 1940** **Examiner: Fahad M. al-Baker**

[54] TRANSFORMER CONSERVATOR ISOLATION VALVE TCIV

[57] Abstract: A Transformer Conservator Isolation Valve (TCIV) comprising of an inlet conduit or pipe (2), outlet conduit or pipe (5) connected to a rectangular housing (7) with an operating device (10) fixed on a shaft (19) placed inside the rectangular housing (7) and lever (9) for locking of the operating device (10); the said operating device (10) is provided with a sealing gasket (20)fitted such that during flow of oil due to rupture of electrical transformer tank or bursting of electrical transformer bushing or draining of oil swings towards the outlet conduit or pipe (5) so as to restrict flow of oil from the electrical transformer conservator (1) to the electrical transformer tank (4), during filtration or filling or refilling, a handle (8) is provided with the operating device (10) outside the rectangular housing (7) which turns anti-clockwise during operation, the operating device (10) does not restrict flow of oil from the electrical transformer conservator (1) during filtration or filling or refilling, two locking plates (13 and 14) provided outside the rectangular housing.

No. of claims: 5 No. of figures: 2

Note: Any interested individual may, within 3 months of publication of the grant, file objection thereof with the Grievance Committee after payment of grievance fees.

(19) pATENT OFFICE OF THE COOPERATION COUNCL FOR THE ARAB STATES OF THE GULF

(19) مكتب براءات الاختراع لمجلس التعاون لدول الخليج العربية

[12] **Patent**

[11] Patent No.: GC0001705 **[45] Date of Publishing the Grant of the Patent: 31/03/2012 17/2012**	**Number of the Decision to Grant the Patent: 11/27238** **Date of the Decision to Grant the Patent: 14/09/2011**
[21] Application No.: GCC/P/2004/3961 **[22] Filing Date: 31/10/2004** **[30] Priority:** **[31] Priority No. [32] Priority date [33] State** **03240211 21/07/2003 KSA** **[72] Inventor: Mohammed Bin Alawi Ishaq Zain Geoffrey** **[73] Owner: Mohammed Bin Alawi Ishaq Zain Geoffrey, ,21434 , Jeddah , KSA** **[74] Agent: Suleiman I.AL-Ammar**	**[51] Int. Cl.[7]:G07D 7/00** **[56] Cited Documents:** **- US 2002/0023220 A1 (KAPLAN JONATHAN C) 21 February 2002** **Examiner: Mohammed A. Aljaffar**

[54] ELECTRONIC CERTIFICATION AND AUTHENTICATION SYSTEM

[57] Abstract: The invention is an automated system that works in the data center of certification offices connected to the internet which enables a member of the any of the certification offices to certify his document electronically from a distance using a computer connected to the internet, digital pad, an electronic pen and a printer. Administrators and registrars use the system to record the registrars and members information and enroll their signatures on a digital pad using an electronic pen and storing the information and the signatures in the database. A member would use the system to enter his document information and enroll his signature on the digital pad using the electronic pen, the system checks the validity of the signature by compare the signature with the signatures data with the enrolled signatures of the members. If the signature is valid the document information is saved in the data center of the certification offices for retrieval when a verification request is needed to check that the document is free from fraud and a 2D barcode is generated. The 2D barcode consist of the information of the document after encrypting the information using one of the two. The member uses the system to print his document information signatures, stamps and the 2D barcode on his printer or authorize someone else to print it in a different place. A verifier would use the system in which it's application run on a computer not connected to the internet and a scanner to scan the document read the 2D barcode decrypt the document information with the other key, decompress the information and display it to verify its correctness and safety from fraud.

No. of claims: 10 No. of figures: 6

Note: Any interested individual may, within 3 months of publication of the grant, file objection thereof with the Grievance Committee after payment of grievance fees.

(19) pATENT OFFICE OF THE COOPERATION COUNCL FOR THE ARAB STATES OF THE GULF

(19) مكتب براءات الاختراع لمجلس التعاون لدول الخليج العربية

[12] **Patent**

[11] Patent No.: GC0001706 **[45] Date of Publishing the Grant of the Patent: 31/03/2012 17/2012**	**Number of the Decision to Grant the Patent: 11/26806** **Date of the Decision to Grant the Patent: 11/09/2011**
[21] Application No.: GCC/P/2007/8234 **[22] Filing Date: 28/04/2007** **[30] Priority:** **[31] Priority No. [32] Priority date [33] State** **PA2006 00606 28/04/2006 DK** **[72] Inventors: 1- Nielsen, Poul Erik Hojlund، 2- Pedersen, Karsten، 3- Dybkjaer, Ib، 4- Nerlov, Jesper** **[73] Owner: Haldor Topsoe A/S, Nymollevei 55, DK-2800 Kgs. Lyngby, Denmark** **[74] Agent: Nassir Ali Kadasa**	**Int. Cl.[7]: B01D 53/86; C10K 1/34, 1/00** **[56] Cited Documents:** **- US 4521387 A (BROECKER FRANZ J [DE] et al.) 04 June 1985** **- WO 2005/063384 A (NISSAN MOTOR [JP]; YASUDA HIROFUMI; SUGA KATSUO; NAKAMURA MASANORI; SH) 14 July 2005** **- US 2004/175327 A1 (HAGEMEYER ALFRED [US] et al.) 09 September 2004** **- EP 1034832 A (SAMSUNG ELECTRO MECH [KR]) 13 September 2000** **Examiner: Abdallah Ibrahim AL-Khatib**

[54] PROCESS FOR THE REMOVAL OF HYDROGEN CYANIDE AND FORMIC ACID FROM SYNTHESIS GAS

[57] Abstract: A process for the catalytic removal of hydrogen cyanide formic acid and formic acid derivatives from synthesis gas comprising these compounds, carbon monoxide and hydrogen, the process comprising containing the synthesis gas with a catalyst comprising one or more metals selected from the group consisting of silver, gold, copper, palladium, platinum and their mixtures and supported on a carrier comprising at least one of the oxides of scandium, yttrium, lanthanum, cerium, titanium, zirconium, aluminium, zinc, chromium and molybdenum.

No. of claims: 11 **No. of figures: 1**

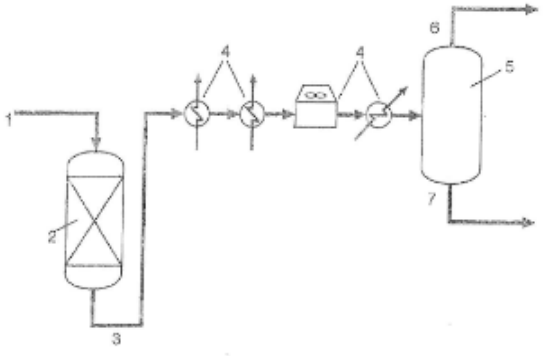

Fig. 1

Note: Any interested individual may, within 3 months of publication of the grant, file objection thereof with the Grievance Committee after payment of grievance fees.

(19) pATENT OFFICE OF THE COOPERATION COUNCL FOR THE ARAB STATES OF THE GULF

(19) مكتب براءات الاختراع لمجلس التعاون لدول الخليج العربية

[12] **Patent**

[11] Patent No.: GC0001707 **[45] Date of Publishing the Grant of the Patent: 31/03/2012 17/2012**	**Number of the Decision to Grant the Patent: 11/26830** **Date of the Decision to Grant the Patent: 11/09/2011**
[21] Application No.: GCC/P/2007/9550 **[22] Filing Date: 24/11/2007** **[30] Priority:** **[31] Priority No. [32] Priority date [33] State** **06124710.2 24/11/2006 EP** **[72] Inventors: 1- Muller, Ulrich، 2- Freiberger, Harald** **[73] Owner: Basf Aktiengesellschaft,67056 , Ludwigshafen, Germany** **[74] Agent: Nassir Ali kadasa**	**[51] Int. Cl.[7]: C07C 2/76 ; C01C 1/04 ; C07C 15/04** **[56] Cited Documents:** **- US 2002/072642 A1 (ALLISON JOE D [US] et al.) 13 June 2002** **Examiner: Mohammad Al-Ismael**

[54] INTEGRATED PROCESS FOR PREPARING BENZENE AND AMMONIA FROM ALIPHATIC HYDROCARBONS AND NITROGEN

[57] Abstract: Process for the integrated preparation of aromatics and ammonia by reaction of a gas stream A comprising at least one C_1-C_6-aliphatic and nitrogen in the presence of at least one catalyst, wherein the C_1-C_6-aliphatics are converted nonoxidatively into aro aromatics in one reaction and the hydrogen liberated in this reaction is reacted with nitrogen to form ammonia in a further reaction.

No. of claims: 11

Note: Any interested individual may, within 3 months of publication of the grant, file objection thereof with the Grievance Committee after payment of grievance fees.

(19) pATENT OFFICE OF THE COOPERATION COUNCL FOR THE ARAB STATES OF THE GULF

(19) مكتب براءات الاختراع لمجلس التعاون لدول الخليج العربية

[12] **Patent**

[11] Patent No.: GC0001708 **[45] Date of Publishing the Grant of the Patent: 31/03/2012 17/2012**	**Number of the Decision to Grant the Patent: 11/27504** **Date of the Decision to Grant the Patent: 15/09/2011**
[21] Application No.: GCC/P/2006/5788 **[22] Filing Date: 07/02/2006** **[30] Priority:** **[31] Priority No. [32] Priority date [33] State** **NL-1028224 08/02/2005 NL** **[72] Inventors: 1- Spaans, Pleter، 2- Van Leur, Paulus Ignatius، 3- Slootweg, Geurt Bastiaan، 4- Van Der Gaag, Fredrik Jan** **[73] Owner: Ten Cate Thiolon B.V., G. Van Der Muelenweg 2, 7443 Re Nijverdal, The Netherlands** **[74] Agent: Nassir Ali Kadasa**	**[51] Int. Cl.[7]: E01C 13/08** **[56] Cited Documents:** **- WO 2005/005730 A (SAUDI COMPANY FOR MFG SYNTHETIC GRASS FIBER; VERLEYEN, MARC) 20 January 2005** **- US 4176150 A (BROMLEY, JAMES E et al) 27 November 1979** **Examiner: Majed I.Al-Rufayyig**

[54] ARTIFICIAL FIBRE OF THE MONOFILAMENT-TYPE FOR USE IN AN ARTIFICIAL GRASS SPORT FIELD AS WELL AS AN ARTIFICIAL GRASS LAWN FOR SPORT FIELDS PROVIDED WITH SUCH ARTIFICIAL FIBRES

[57] Abstract: The invention relates to an artificial fibre of the monofilament-type for use in an artificial grass sport field wherein, seen in a sectional direction of the fibre, at least part of the fibre is provided with stiffness-enhancing means extending in the longitudinal direction thereof. The invention also relates to an artificial grass lawn suitable for sports fields, consisting at least of a substrate to which one or more artificial fibres according to the invention are attached. The object of the invention is to provide an improved artificial fibre for use in an artificial grass sports field, which fibre is on the one hand less flexible and consequently exhibits less tendency to assume a flat orientation, but which on the other hand does not constitute an increased risk of injuries or have an adverse effect on the playing characteristics. According to the invention, the artificial fibre is characterized in that the fibre is built up of at least two fibre flange portions, at least one fibre flange portion of which forms the stiffness-enhancing means, whilst said at least two fibre flange portions have a uniform thickness.

No. of claims: 10 No. of figures: 7

Note: Any interested individual may, within 3 months of publication of the grant, file objection thereof with the Grievance Committee after payment of grievance fees.

(19) pATENT OFFICE OF THE COOPERATION COUNCL FOR THE ARAB STATES OF THE GULF

(19) مكتب براءات الاختراع لمجلس التعاون لدول الخليج العربية

[12] **Patent**

[11] Patent No.: GC0001709 **[45] Date of Publishing the Grant of the Patent: 31/03/2012 17/2012**	**Number of the Decision to Grant the Patent: 11/26824** **Date of the Decision to Grant the Patent: 11/09/2011**
[21] Application No.: GCC/P/2007/8675 **[22] Filing Date: 10/07/2007** **[30] Priority:** **[31] Priority No. [32] Priority date [33] State** **2006-193053 13/07/2006 JP** **[72] Inventors: 1- Naoki Kimura,، 2- Shigeto Kawai** **[73] Owner: Chugai Seiyaku Kabushiki Kaisha, 5-1 Ukima 5-chome, Kita-ku, Tokyo 115-8543, Japan** **[74] Agent: Nassir Ali Kadasa**	**[51]Int. CI. [7]: C12N 15/00, A61K 39/395** **[56] Cited Documents:** **- EP 1561759 A1 (CHUGAI SEIYAKU KABUSHIKI KAISHA TOKYO, Ozaki, Shuji, Tokushima-shi, Tokushima 770-0804,(JP) Abe, Masahiro, Tokushima 770-0033 (JP)) 10 October 2003** **Examiner: Nouf Saleh Alnassban**

[54] CELL DEATH-INDUCING AGENTS

[57] Abstract: An objective of the present invention is to provide an antibody having a high apoptosis-inducing activity. To solve the above-described problems, the present inventors immunized mice with cells expressing human HLA class IA and human β2 microglobulin (β2M) to obtain monoclonal antibodies. Screening of the obtained antibodies was performed to obtain ten clones of antibodies having an apoptosis-inducing activity. Analyses of these clones revealed that three of the clones (antibodies C3B3, C11B9, and C17D11), which have the β2 domain of the HLA class I antigen as an epitope, showed a stronger cytotoxic activity when crosslinked with an anti-mouse IgG antibody. Furthermore, when a C3B3 diabody was generated, this diabody was revealed to show a stronger anti-tumor effect compared with conventional diabodies of the 2D7 antibody, which is an HLA class IA antibody.

No. of claims: 25 No. of figures: 13

Note: Any interested individual may, within 3 months of publication of the grant, file objection thereof with the Grievance Committee after payment of grievance fees.

(19) pATENT OFFICE OF THE COOPERATION COUNCL FOR THE ARAB STATES OF THE GULF

(19) مكتب براءات الاختراع لمجلس التعاون لدول الخليج العربية

[12] **Patent**

[11] Patent No.: GC0001710 **[45] Date of Publishing the Grant of the Patent: 31/03/2012 17/2012**	**Number of the Decision to Grant the Patent: 11/26959** **Date of the Decision to Grant the Patent: 12/09/2011**
[21] Application No.: GCC/P/2004/3475 **[22] Filing Date: 18/05/2004** **[30] Priority:** **[31] Priority No. [32] Priority date [33] State** **10/442,461 21/05/2003 US** **10/705,693 10/11/2003 US** **[72] Inventors: 1- Gary S. Silverman، 2- David A. Mountz، 3- Mark A. Aubart، 4- Kenneth K. Tseng، 5- Michael B. Abrams، 6- Jerome Obiols** **[73] Owner: Atofina Chemicals, Inc., 2000 ، ،3222-19103 ،Philadelphia ،Market Street Pennsylvania, USA** **[74] Agent: Saud M. A. Shawwaf**	**[51] Int. Cl.[7]: C08F 220/10, 230/08; C09D 133/04, 135/02, 143/04, 183/04, 183/08, 5/16, 7/12** **[56] Cited Documents:** **- US 2003225184 A (ANTHONY AUBART MARK) 14 December 2003** **Examiner: Bander M. Al-Thobity**

[54] TRIARYLSILYLMETHACRYLOYL-CONTAINING POLYMERS FOR MARINE COATING COMPOSITIONS

[57] Abstract: Polymers containing triarylsilyl(meth)acryloyl units are erodible in seawater and can be used to formulate antifouling marine paints. The polymers are characterized by low levels of triarylsilyl(meth) acrylate units and an erosion rate in seawater of 2 to about 15 mu m per month.

No. of claims: 21 No. of figures: 3

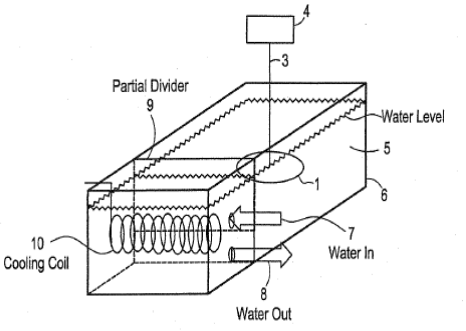

Note: Any interested individual may, within 3 months of publication of the grant, file objection thereof with the Grievance Committee after payment of grievance fees.

(19) pATENT OFFICE OF THE COOPERATION COUNCL FOR THE ARAB STATES OF THE GULF

(19) مكتب براءات الاختراع لمجلس التعاون لدول الخليج العربية

[12] **Patent**

[11] Patent No.: GC0001711 **[45] Date of Publishing the Grant of the Patent: 31/03/2012 17/2012**	**Number of the Decision to Grant the Patent: 11/27749** **Date of the Decision to Grant the Patent: 28/09/2011**
[21] Application No.: GCC/P/2004/3427 **[22] Filing Date: 02/05/2004** **[30] Priority:** **[31] Priority No. [32] Priority date [33] State** **10319625 02/05/2003 DE** **[72] Inventors: 1- Franz Reisser،2- Klaus Steuer،3- Dr. Martin Hirsch** **[73] Owner: Outokumpu Oyj, 7 Riihitontuntie 7, 02200, Espoo, Finland** **[74] Agent: Saud M. A. Shawwaf**	**[51] Int. Cl.[7]: B01J 8/28; C21B 13/00** **[56] Cited Documents:** **- GB 982244 A (ATOMIC EBERGY AUTHORITY UK) 03 February 1965** **- DE 4410093 C (METALLGESELLSCHAFT AG) 09 March 1995** **- US 2419245 A (ARVESON MAURICE H) 22 April 1947** **Examiner: Abdulaziz S. AL-Motek**

[54] METHOD AND PLANT FOR THE HEAT TREATMENT OF SOLIDS CONTAINING IRON OXIDE

[57] Abstract: This invention relates to a method and a plant for the heat treatment of solids, in particular for reducing solids containing iron oxide, in a fluidized-bed reactor (5, 30). For fluidizing the solids, fluidizing gas is introduced into the fluidized-bed reactor (5, 30) via distributor grates (7, 32). Between a solids feed pipe (37) and a solids discharge pipe (38) of the fluidized-bed reactor (5, 30), the solids pass through multiple chambers (8, 34) each with a distributor grate (7, 32), which are at least partly separated from each other by weirs (6, 33). The pressure of the fluidizing gas introduced into the individual chambers through the distributor grates (7, 32), which are offset with respect to each other in vertical direction, substantially is the same. The delivery of the solids from the solids feed inlet (37) to the solids discharge outlet (38) is promoted by the inclination of the fluidized-bed reactor (5, 30) with respect to the horizontal.

No. of claims: 8 No. of figures: 4

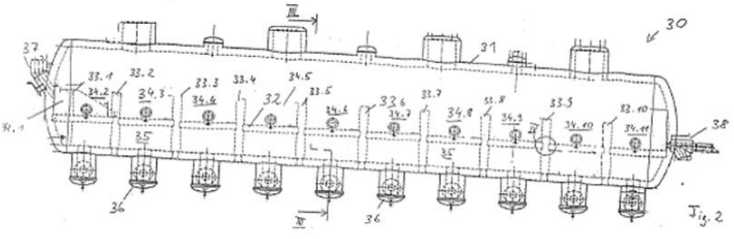

Note: Any interested individual may, within 3 months of publication of the grant, file objection thereof with the Grievance Committee after payment of grievance fees.

(19) pATENT OFFICE OF THE COOPERATION COUNCL FOR THE ARAB STATES OF THE GULF

(19) مكتب براءات الاختراع لمجلس التعاون لدول الخليج العربية

[12] Patent

[11] Patent No.: GC0001712 **[45] Date of Publishing the Grant of the Patent: 31/03/2012 17/2012**	**Number of the Decision to Grant the Patent: 11/26955** **Date of the Decision to Grant the Patent: 12/09/2011**
[21] Application No.: GCC/P/2007/9608 **[22] Filing Date: 04/12/2007** **[30] Priority:** **[31] Priority No. [32] Priority date [33] State** **11/567,543 06/12/2006 US** **[72] Inventors: 1- Bruce E. Reynolds، 2- Axel Brait** **[73] Owner: Chevron U.S.A. Inc.** **[74] Agent: Saud M. A. Shawwaf**	**[51] Int. Cl.[7]: C01C 1/24** **[56] Cited Documents:** **- US 4434141 A (HUBRED et al.) 28 February 1984** **- US 4036943 A (HURON et al.) 19 July 1977** **- US 5431892 A (TOYABE et al.) 11 July 1995** **- US 4885080 A (BROWN et al.) 05 December 1989** **- US 4554138 A (MARCANTONIO) 19 November 1985** **- US 2004/0081602 A2 (HAN et al.) 29 April 2004** **Examiner: Mohammad Al-Ismael**

[54] DECOMPOSITION OF WASTE PRODUCTS FORMED IN SLURRY CATALYST SYNTHESIS

[57] Abstract: This application discloses a process for decomposition of ammonium sulfate found in a stream comprising ammonium sulfate and slurry catalyst in oil. The ammonium sulfate is broken down into ammonia and hydrogen sulfide gas. These gases have many uses throughout the refinery, including the preparation of slurry hydroprocessing catalyst.

No. of claims: 20 No. of figures: 2

Note: Any interested individual may, within 3 months of publication of the grant, file objection thereof with the Grievance Committee after payment of grievance fees.

(19) pATENT OFFICE OF THE
COOPERATION COUNCL FOR
THE ARAB STATES OF THE GULF

(19) مكتب براءات الاختراع
لمجلس التعاون لدول الخليج العربية

[12] **Patent**

[11] Patent No.: GC0001713 **[45] Date of Publishing the Grant of the Patent: 31/03/2012 17/2012**	**Number of the Decision to Grant the Patent: 11/27746** **Date of the Decision to Grant the Patent: 28/09/2011**
[21] Application No.: GCC/P/2008/12258 **[22] Filing Date: 26/11/2008** **[30] Priority:** **[31] Priority No. [32] Priority date [33] State** **2007/0572 29/11/2007 BE** **[72] Inventor: Bruno Tack** **[73] Owner: Dredging International, 30Scheldedijk ,2070-B , Zwijndrecht , Belgium** **[74] Agent: Saud M. A. Shawwaf**	**[51] Int. Cl.[7]: E02F 3/92** **[56] Cited Documents:** **- SU 1573101 A1 (GELPEJ VLADILEN L [SU]) 23 June 1990** **Examiner: Fahad M. al-Baker**

[54] DRAG HEAD OF A TRAILING SUCTION HOPPER DREDGER AND METHOD FOR DREDGING USING THIS DRAG HEAD

[57] Abstract: The invention relates to a drag head of a trailing suction hopper dredger. The drag head comprises a rotatable visor connected to a suction pipe for discharging soil via the suction opening of the visor, wherein. the visor is provided with a catching construction for undesirable objects. The catching construction closes the suction opening except for passage openings, wherein at least a number of passage openings have a variable passage area. The invention also relates to a method for breaking up and/or dredging at least partially hard grounds under Water using a trailing suction hopper dredger equipped with a drag head.

No. of claims: 9 No. of figures: 7

Note: Any interested individual may, within 3 months of publication of the grant, file objection thereof with the Grievance Committee after payment of grievance fees.

(19) pATENT OFFICE OF THE
COOPERATION COUNCL FOR
THE ARAB STATES OF THE GULF

(19) مكتب براءات الاختراع
لمجلس التعاون لدول الخليج العربية

[12] **Patent**

[11] Patent No.: GC0001714 **[45] Date of Publishing the Grant of the Patent: 31/03/2012 17/2012**	**Number of the Decision to Grant the Patent: 11/27762** **Date of the Decision to Grant the Patent: 28/09/2011**
[21] Application No.: GCC/P/2006/6454 **[22] Filing Date: 20/06/2006** **[30] Priority:** **[31] Priority No. [32] Priority date [33] State** **2005/0320 23/06/2005 BE** **[72] Inventor: Clymans Etinne** **[73] Owner: Dredging International, 30Scheldedijk ,2070-B ,Zwijndrecht , Belgium** **[74] Agent: Saud M. A. Shawwaf**	**[51] Int. Cl.[7]: E02F 3/90; B66F 11/04** **[56] Cited Documents:** **- JP 49095398 A (NOT KNOWN) 10 September 1974** **- SU 1229131 A1 (FILATOV VLADIMIR S,SU; MOKRUSHIN YURIJ N, SU) 07 May 1986** **- JP 52043296 A (WAKAMATSU MORITOMO) 05 April 1977** **Examiner: Fahad M. al-Baker**

[54] DEVICE AND METHOD FOR CHANGING A SUCTION MOUTH

[57] Abstract: Device for changing a suction mouth of a cutter suction dredge of a vessel with cutter ladder, comprising a work platform which, as seen in the transverse direction of the vessel, is provided substantially in the middle with an opening, wherein a support structure is provided which can be fixedly connected to the work platform in a position substantially under the opening, which support structure is adapted to support a suction mouth; the work platform with support structure is tiltable around a first, substantially horizontal transverse axis between a substantially horizontal operating position and a high position in which the cutter ladder can be moved upward , which positions are such that the work platform with support structure is movable from its high position to its operating position when the cutter ladder is situated in a high raised position.

No. of claims: 18 No. of figures: 3

Note: Any interested individual may, within 3 months of publication of the grant, file objection thereof with the Grievance Committee after payment of grievance fees.

(19) pATENT OFFICE OF THE COOPERATION COUNCL FOR THE ARAB STATES OF THE GULF

(19) مكتب براءات الاختراع لمجلس التعاون لدول الخليج العربية

[12] **Patent**

[11] Patent No.: GC0001715 **[45] Date of Publishing the Grant of the Patent: 31/03/2012 17/2012**	**Number of the Decision to Grant the Patent: 11/27759** **Date of the Decision to Grant the Patent: 28/09/2011**
[21] Application No.: GCC/P/2006/6660 **[22] Filing Date: 26/07/2006** **[30] Priority:** **[31] Priority No. [32] Priority date [33] State** **00717/06 02/05/2006 CN** **[72] Inventor: Rolf Mohleman** **[73] Owner: Fostag Holding AG, 28e Kaltenbacherstrass,8260 ,Stein am Rhein , Switzerland** **[74] Agent: Saud M. A. Shawwaf**	**[51] Int. Cl.[7]: A47G 21/02** **[56] Cited Documents:** **- US 2752678 A (WELCH ARTHUR R) 03 July 1956** **Examiner: Fahad M. al-Baker**

[54] STACKABLE CUTLERY ELEMENT

[57] Abstract: A stackable cutlery element consists of a handle and a functional element shaped onto it. To achieve maximum stability the handle of the cutlery element is designed as a wall with longitudinal rubs arranged on the edge of both sides, so that an essentially H-shaped cross-section is obtained. For additional stabilisation an end rib is arranged on the longitudinal end of the handle opposing the functional element on both sides of the wall. The end rib and the two longitudinal ribs on both sides are designed so that when the cutlery elements of the invention are stacked, the end rib and the longitudinal ribs of the first side of a cutlery element engage positively in the end rib and longitudinal ribs of the second side of the further cutlery element to connecting to them in the stacking direction.

No. of claims: 5 No. of figures: 9

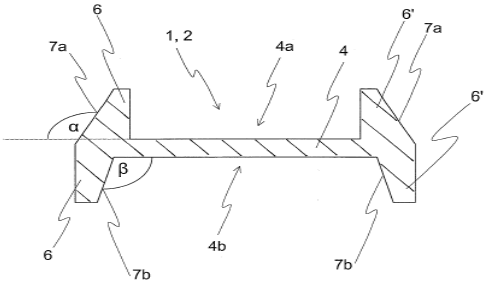

Note: Any interested individual may, within 3 months of publication of the grant, file objection thereof with the Grievance Committee after payment of grievance fees.

(19) pATENT OFFICE OF THE COOPERATION COUNCL FOR THE ARAB STATES OF THE GULF

(19) مكتب براءات الاختراع لمجلس التعاون لدول الخليج العربية

[12] **Patent**

[11] Patent No.: GC0001716 **[45] Date of Publishing the Grant of the Patent: 31/03/2012 17/2012**	**Number of the Decision to Grant the Patent: 11/26850** **Date of the Decision to Grant the Patent: 11/09/2011**
[21] Application No.: GCC/P/1999/192 **[22] Filing Date: 26/06/1999** **[72] Inventor: Michael Patrick Parker** **[73] Owner: Rothmans International Services Limited, 15 Hill Street, London W1X 7FB, United Kingdom** **[74] Agent: Suleiman I. Al-Ammar**	**[51] Int. Cl.[7]: B65D 85/10, 75/58** **[56] Cited Documents:** **- WO 98/22367 A1 (ROTHMANS INTERNATIONAL SERVICES LIMITED) 28 May 1998** **- US 4300676 A (FOCKE et al.) 17 November 1981** **- EP 0661154 A1 (SAFTA S.p.A.) 05 July 1995** **Examiner: Imad A AL- Ahaidib**

[54] PACKAGING OF SMOKING ARTICLES

[57] Abstract: A label (7) for resealing an enclosure a cigarette pack is provided with a pull tab (1) defined by a cut (16) through one layer (14) of two-layer structure (14,15), the tab surface (19) being non-adhesive but at least part of the corresponding surface of the major portion of the label being permanently tacky (18).

No. of claims: 6 **No. of figures: 4**

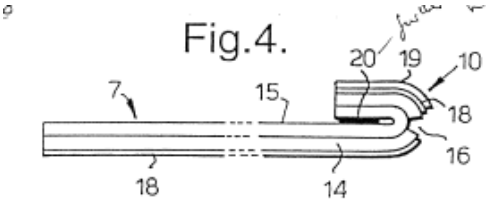

Note: Any interested individual may, within 3 months of publication of the grant, file objection thereof with the Grievance Committee after payment of grievance fees.

(19) pATENT OFFICE OF THE COOPERATION COUNCL FOR THE ARAB STATES OF THE GULF

(19) مكتب براءات الاختراع لمجلس التعاون لدول الخليج العربية

[12] **Patent**

[11] Patent No.: GC0001717 **[45] Date of Publishing the Grant of the Patent: 31/03/2012 17/2012**	**Number of the Decision to Grant the Patent: 11/27254** **Date of the Decision to Grant the Patent: 14/09/2011**
[21] Application No.: GCC/P/2002/2108 **[22] Filing Date: 29/06/2002** **[30] Priority:** **[31] Priority No. [32] Priority date [33] State** **09/896,365 29/06/2001 US** **[72] Inventors: 1- Morello, Frederick،** **2- Yagodich, Matthew J.** **[73] Owner: M.I.C. Industries, Inc., One Foubtain Square, Freedom drive 11911, Virginia 20190, Reston, USA** **[74] Agent: Suleiman I. Al-Ammar Law Office**	**[51] Int. Cl.[7]: E04B 1 /32** **[56] Cited Documents:** **- US 4962622 A (ALBERCHT et al.) 16 October 1990** **- US 5584198 A (MORELLO et al.) 17 December 1996** **- US 3842647 A (KNUDSON) 22 October 1974** **Examiner: Majed I.Al-Rufayyig**

[54] A BUILDING PANEL AND PANEL CRIMPING MACHINE

[57] Abstract: The present invention is an improved building panel having increased strength and rigidity, thereby reducing present design constraints imposed upon buildings constructed of interconnected panels. The building panel includes a novel curved central portion connected to two diverging inclined side wall portions in lieu of a straight central portion. Replacing the straight curved portion with a curved portion provides the building panel with increased strength and rigidity, thereby allowing the building panel to withstand increased positive and negative bending moments. Thus, a building constructed of panels having such curved central portions will reduce the present design constraints and increase the size and shape of buildings constructed of such panels.

No. of claims: 27

Note: Any interested individual may, within 3 months of publication of the grant, file objection thereof with the Grievance Committee after payment of grievance fees.

(19) pATENT OFFICE OF THE COOPERATION COUNCL FOR THE ARAB STATES OF THE GULF

(19) مكتب براءات الاختراع لمجلس التعاون لدول الخليج العربية

[12] **Patent**

[11] Patent No.: GC0001718 **[45] Date of Publishing the Grant of the Patent: 31/03/2012 17/2012**	**Number of the Decision to Grant the Patent: 11/26799** **Date of the Decision to Grant the Patent: 11/09/2011**
[21] Application No.: GCC/P/2003/2453 **[22] Filing Date: 21/01/2003** **[30] Priority:** **[31] Priority No. [32] Priority date [33] State** **00951/02 28/01/2002 FR**	**[51] Int. Cl.[7]: A61K 31/439, 31/4995** **[56] Cited Documents:** **- WO 9805659 A (NAYLOR ANTOINEETE; HUNT ERIC (GB); SMITHKLINE BEECHAM PLC (GB); TA) 12 February 1998** **- WO 9518129 A (PFIZER; HOWARD HARRY R JR (US); SHENK KEVIN D (US)) 06 July 1995**
[72] Inventors: 1- David Alan Rowlands، 2- Jozsef Aszodi، 3- Claude Fromentin، 4- Maxime Lampilas **[73] Owner: NOVEXEL, de Noisy Route, 102, 93230, Romainville, France** **[74] Agent: Suleiman I. Al-Ammar**	**Examiner: Nouf Saleh Alnassban**

[54] NEW HETROCYCLIC COMPOUNDS, WHICH ARE ACTIVE AS INHIBITORS OF BETA-LACTAMASES

[57] Abstract: The invention relates to the use of compounds of formula (1) and the pharmaceutical acceptable salts thereof in the preparation of a medicament used to inhibit the production of beta-lactamases by pathogenic bacteria.

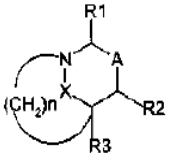

(I)

No. of claims: 8

Note: Any interested individual may, within 3 months of publication of the grant, file objection thereof with the Grievance Committee after payment of grievance fees.

(19) pATENT OFFICE OF THE COOPERATION COUNCL FOR THE ARAB STATES OF THE GULF

(19) مكتب براءات الاختراع لمجلس التعاون لدول الخليج العربية

[12] **Patent**

[11] Patent No.: GC0001719 **[45] Date of Publishing the Grant of the Patent: 31/03/2012 17/2012**	**Number of the Decision to Grant the Patent: 11/27880** **Date of the Decision to Grant the Patent: 28/09/2011**
[21] Application No.: GCC/P/2004/3574 **[22] Filing Date: 22/06/2004** **[30] Priority:** **[31] Priority No. [32] Priority date [33] State** **0314813.7 25/06/2003 GB** **[72] Inventor: Peter William Farnell** **[73] Owner: Johnson Matthey PLC, 2-4 Cockspur Street, Trafalgar Square, London SW1Y 5BQ, United Kingdom** **[74] Agent: Suleiman I. Al-Ammar**	**[51]Int. Cl.[7]: A21B 1/02; A47J 36/02, 37/06; F24C 7/06** **[56] Cited Documents:** **- EP 0723930 A (TEXACO DEVELOPMENT CORP) 31 July 1996** **Examiner: Abdulaziz S. AL-Motek**

[54] REFORMING PROCESS

[57] Abstract: A reforming process is described comprising the steps of

(a) partially oxidising a feed-gas comprising a hydrocarbon feedstock with an oxygen- containing gas,

(b) bringing the composition of the resulting partially oxidised gas stream towards equilibrium by passing said partially oxidised gas stream over a reforming catalyst to provide a raw synthesis gas mixture,

(c) cooling said raw synthesis gas mixture and

(d) separating condensed water from the raw synthesis gas mixture,

characterised in that prior to the step of separating the condensed water from the raw synthesis gas mixture, part of said raw synthesis gas mixture is recycled to the partial oxidation step. The recycle of the raw synthesis gas mixture to the partial oxidation step provides an energy- efficient source of hydrogen and steam that may e.g. inhibit carbon formation.

No. of claims: 10 No. of figures: 1

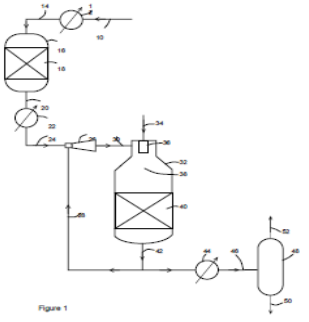

Note: Any interested individual may, within 3 months of publication of the grant, file objection thereof with the Grievance Committee after payment of grievance fees.

(19) pATENT OFFICE OF THE COOPERATION COUNCL FOR THE ARAB STATES OF THE GULF

(19) مكتب براءات الاختراع لمجلس التعاون لدول الخليج العربية

[12] **Patent**

[11] Patent No.: GC0001720 **[45] Date of Publishing the Grant of the Patent: 31/03/2012 17/2012**	**Number of the Decision to Grant the Patent: 11/26864** **Date of the Decision to Grant the Patent: 11/09/2011**
[21] Application No.: GCC/P/2005/4529 **[22] Filing Date: 09/04/2005** **[30] Priority:** **[31] Priority No. [32] Priority date [33] State** **60/560,038 08/04/2004 US** **[72] Inventors: 1- Syed Tajammul Hussain،** **2- Eugene Stelmack** **[73] Owner: Sulzer Metco (Canada) Inc., 10102-114 Street, Fort Saskatchewan, Alberta T8L 3W4, Canada** **[74] Agent: Suleiman I. Al-Ammar**	**[51] Int. Cl.[7]: B01J 23/755, 21/04; C01B 3/40** **[56] Cited Documents:** **Not available** **- CN1042696 A（INST OF QILU PETRO CHEMICAL CO）06 June 1990** **- US6013173 A（UOP LLC）01 January 2000** **Examiner: Fahed Zoaid AlMutairi**

[54] SUPPORTED CATALYST FOR STEAM METHANE REFORMING AND AUTOTHERMAL REFORMING REACTIONS

[57] Abstract: The invention relates to supported catalysts and a process for the production of these catalysts. These supported catalysts may be used in various reactions such as reforming reactions (e.g. methane reforming (SMR) reactions and autothermal reforming (ATR) reactions). In one aspect of the invention, the supported catalyst comprises a transition metal oxide; optionally a rare-earth metal oxide; and a transition metal aluminate.

No. of claims: 26 No. of figures: 5

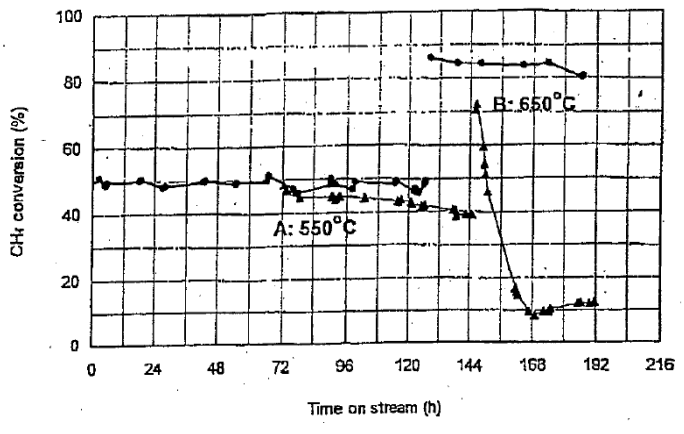

Note: Any interested individual may, within 3 months of publication of the grant, file objection thereof with the Grievance Committee after payment of grievance fees.

(19) pATENT OFFICE OF THE COOPERATION COUNCL FOR THE ARAB STATES OF THE GULF

(19) مكتب براءات الاختراع لمجلس التعاون لدول الخليج العربية

[12] **Patent**

[11] Patent No.: GC0001721 **[45] Date of Publishing the Grant of the Patent: 31/03/2012 17/2012**	**Number of the Decision to Grant the Patent: 11/27236** **Date of the Decision to Grant the Patent: 14/09/2011**
[21] Application No.: GC/P/2005/4860 **[22] Filing Date: 29/06/2005** **[30] Priority:** **[31] Priority No. [32] Priority date [33] State** **10/881,269 30/06/2004 US** **[72] Inventors: 1- TROY FIELDS، 2- CHARLES FENSKY، 3- EDWARD HARRIGAN، 4- BUNKER HILL، 5- ALI AGHBALI، 6- CHRISTOPHER DEL CAMPO، 7- OIVIND BROCKMEIER** **[73] Owner: Servicios de Perfilajes Electronicos, S. A.Craigmuir Chambers , P.O Box 71Road ،Town ,Tortola British Virgin Islands** **[74] Agent: Suleiman I. Al-Ammar**	**[51] Int. Cl.[7]:E21B 49/06, 49/10** **[56] Cited Documents:** **- US 5056595 A(DESBRANDES) 15 October 1991** **- US 3530933 A (WHITTEN) 29 September 1970** **- US 5692565 A (MACDOUGALL et al.) 02 December 1997** **Examiner: Mohammed A. Aljaffar**

[54] APPARATUS AND METHOD FOR CHARACTERIZING A RESERVOIR

[57] Abstract: An apparatus and method for characterizing a subsurface formation is provided. The apparatus includes a tool body, a probe assembly carried by the tool body for sealing off a region of the borehole wall, an actuator for moving the probe assembly between a retracted position for conveyance of the tool body and a deployed position for sealing off a region of the borehole wall and a perforator extending through the probe assembly for penetrating a portion of the sealed-off region of the borehole wall. The tool may be provided with first and second drilling shafts with bits for penetrating various surfaces. The method involves sealing off a region of a wall of an open borehole penetrating the formation, creating a perforation through a portion of the sealed-off region of the borehole wall and testing the formation.

No. of claims: 5 No. of figures: 12

Note: Any interested individual may, within 3 months of publication of the grant, file objection thereof with the Grievance Committee after payment of grievance fees.

(19) pATENT OFFICE OF THE COOPERATION COUNCL FOR THE ARAB STATES OF THE GULF

(19) مكتب براءات الاختراع لمجلس التعاون لدول الخليج العربية

[12] **Patent**

[11] Patent No.: GC0001722 **[45] Date of Publishing the Grant of the Patent: 31/03/2012 17/2012**	**Number of the Decision to Grant the Patent: 11/26797** **Date of the Decision to Grant the Patent: 11/09/2011**
[21] Application No.: GCC/P/2006/5895 **[22] Filing Date: 01/03/2006** **[30] Priority:** **[31] Priority No. [32] Priority date [33] State** **05004894,1 06/03/2005 EP** **[72] Inventors: 1- Ermanno Filippi، 2- Geoffrey Frederick Skinner** **[73] Owner: Ammonia Casale.S.A, Switzerland, Via Giulio Pocobelli, 6, CH-6900, Lugano-Besso, Switzerland** **[74] Agent: Suleiman I. Al-Ammar**	**Int. Cl.[7]: C01B 3/02, 3/00; B01J 8/02, B01J 8/02** **[56] Cited Documents:** **- GB 1156003 A (C.F. BRAUN 7 CO) 25 June 1969** **- DE 1567715 A1 (METALLGESELLSCHAFT AG) 2 July 1970** **- DE 1122087 B (GESELLSCHAFT FUER LINDE`S EISMASCHINEN AKTIENGESELLSCHAFT, ZWEIGNIEDER) 18 January 1962** **Examiner: Abdallah Ibrahim AL-Khatib**

[54] PROCESS FOR SYNTHESIS GAS PRODUCTION

[57] Abstract: A process for obtaining a synthesis gas (GS) at a predetermined high pressure corresponding to the ammonia synthesis pressure, in which there are hydrogen and nitrogen in a 3/1 molar ratio, comprising the steps of feeding a continuous flow of natural gas to a primary reforming step (RP) with steam and to a subsequent secondary reforming step (RS) with excess air obtaining a gaseous flow (GF) comprises hydrogen, excess nitrogen with respect to said molar ratio, undesired substances such as impurities and inerts and subjects said gaseous flow to a purification step comprising cryogenic rectification in a separator unit (S) obtaining a continuous flow of synthesis gas (GS) comprising hydrogen and nitrogen in a 3/1 molar ratio, and to a subsequent compression step up to a pressure value required for ammonia synthesis.

No. of claims: 7 No. of figures: 2

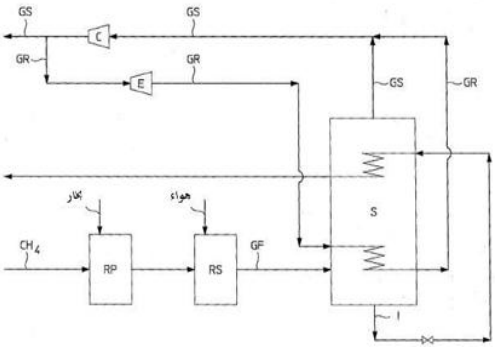

Note: Any interested individual may, within 3 months of publication of the grant, file objection thereof with the Grievance Committee after payment of grievance fees.

(19) pATENT OFFICE OF THE COOPERATION COUNCL FOR THE ARAB STATES OF THE GULF

(19) مكتب براءات الاختراع لمجلس التعاون لدول الخليج العربية

[12] **Patent**

[11] Patent No.: GC0001723 **[45] Date of Publishing the Grant of the Patent: 31/03/2012 17/2012**	**Number of the Decision to Grant the Patent: 11/27887** **Date of the Decision to Grant the Patent: 28/09/2011**
[21] Application No.: GCC/P/2006/6255 **[22] Filing Date: 15/05/2006** **[30] Priority:** **[31] Priority No. [32] Priority date [33] State** **540097 2005/05/16 NZ** **543439 2005/11/22 NZ** **[72] Inventor: Angus Peter Robson** **[73] Owner: Rocktec Limited,Mangawhero ،Road,Matamata New Zealand –New Zealand .** **[74] Agent: Suleiman I. Al-Ammar**	**[51] Int. Cl.[7]: E01C 23/12** **[56] Cited Documents:** **- US 5183316 A(OTTESTAD) 02 February 1993** **Examiner: Fahad M. al-Baker**

[54] IMPROVED HAMMER MOUNTING

[57] Abstract: An impact hammer (1) for breaking, levering and raking material, the hammer (1) including: a movable mass capable movement along an impact axis (14), an elongated tool (23) having a longitudinal axis substantially parallel or coaxial with the impact axis(14), a primary pivot (6) attachment point for attaching the hammer (1) to a distal end of an operating arm (2) attached to the carrier for pivotal movement of the hammer (1) about a primary axis (6) orthogonal to the impact axis (14); an articulated control linkage (3) including first (4) and second links (5) for effecting pivotal movement of the hammer (1) about the primary axis (6) in response to movement from a drive attached to the operating arm (2), the first link (4) being pivotally attachable: to the hammer (1) at a first end to form a secondary pivot axis (8) parallel to said primary axis (6), at a second end to the drive forming a tertiary pivot point axis (12) and to the second link (5), the second link (5) being pivotally attachable at a first end to the operating arm (2) forming a quaternary pivot axis (13) parallel to the secondary (8) and tertiary axes(12), at a second end to the second end of the first link (4) and at a second end to the drive, characterised in that the primary (6), tertiary (12) and quaternary (13) pivot axes are all located on an opposing side of the impact axis (14) to the secondary pivot axis (8), wherein the primary pivot axis (6) is located laterally to the impact axis (14) between the opposed distal ends of the tool (23).

No. of claims: 24 No. of figures: 10

Note: Any interested individual may, within 3 months of publication of the grant, file objection thereof with the Grievance Committee after payment of grievance fees.

(19) pATENT OFFICE OF THE COOPERATION COUNCL FOR THE ARAB STATES OF THE GULF

(19) مكتب براءات الاختراع لمجلس التعاون لدول الخليج العربية

[12] **Patent**

[11] Patent No.: GC0001724 **[45] Date of Publishing the Grant of the Patent: 31/03/2012 17/2012**	**Number of the Decision to Grant the Patent: 11/26792** **Date of the Decision to Grant the Patent: 11/09/2011**
[21] Application No.: GCC/P/2006/6537 **[22] Filing Date: 05/07/2006** **[30] Priority:** **[31] Priority No. [32] Priority date [33] State** **05254234,7 06/07/2005 EP** **05257794,7 19/12/2005 EP** **[72] Inventors: 1- Lee, Michael Keith، 2- Bolton, Leslie Wiliam، 3- Gracey, Benjamin Patrick، 4- BELL, Peter Simpson** **[73] Owner: BP Chemicals Limited, Chertsey road, Thames-on-Sunbury, BP7 16TW , Middlesix, United Kingdom** **[74] Agent: Suleiman I. Al-Ammar**	**[51] Int. Cl.[7]: C07C29/151, 31/02** **[56] Cited Documents:** **- US 4346179 A (SUGIER et al.) 24 August 1982** **Examiner: Abdallah Ibrahim AL-Khatib**

[54] PROCESS FOR THE CONVERSION OF SYNTHESIS GAS TO OXYGENATES

[57] Abstract: The present invention provides a process for the conversion of carbon oxide(s) and hydrogen containing feedstocks into alcohols in the presence of a particulate catalyst

No. of claims: 18 No. of figures: 2

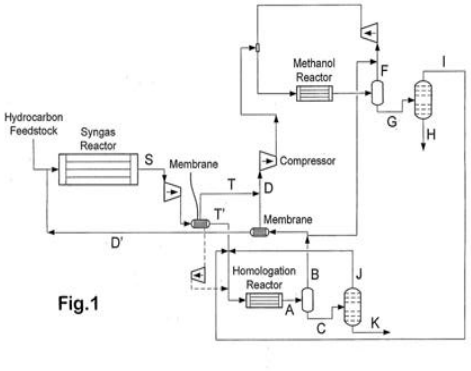

Fig.1

Note: Any interested individual may, within 3 months of publication of the grant, file objection thereof with the Grievance Committee after payment of grievance fees.

[12] Patent

[11] Patent No.: GC0001725 **[45] Date of Publishing the Grant of the Patent: 31/03/2012 17/2012**	**Number of the Decision to Grant the Patent: 11/27874** **Date of the Decision to Grant the Patent: 28/09/2011**
[21] Application No.: GCC/P/2006/7261 **[22] Filing Date: 22/11/2006** **[30] Priority:** **[31] Priority No. [32] Priority date [33] State** **0523925.6 24/11/2005 GB** **[72] Inventor: James Heselden** **[73] Owner: Hesco Bastion Limited, 37Unit Cross Green I،Knowsthorpe Gate Estate ., 9LS ، NP0 ,Leeds –England ,England** **[74] Agent: Suleiman I. Al-Ammar**	**[51] Int. Cl.[7]: E02D 29/02** **[56] Cited Documents:** **- WO 9012160 A (HESSELDEN) 18 October 1990** **- GB 1567830 A (CAMILLERI) 21 May 1980** **- WO 2005/023453 A1 (O'BRIEN) 17 March 2005** **- GB 24423107 A (HESELDEN) 16 August 2006** **- JP 2003155722 A (KIKUCHI) 30 May 2003** **- JP 2004060207 A (SHIRAI) 26 February 2004** **Examiner: Fahad M. al-Baker**

[54] MULTI-COMPARTMENTAL GABION CAN BE FOLDED

[57] Abstract: The invention concerns a recoverable gabion (1) for use in protecting military or civilian installations from weapons assault or from elemental forces, such as flood waters, lava flows, avalanches, soil instability, slope erosion and the like. The gabion (1) comprises opposed side walls (2,3) comprising a plurality of side wall elements (14, 15) connected together at spaced intervals by a plurality of partition walls (4, 5, 6) such that spaces between neighboring pairs of partition walls define, together with the side walls, individual compartments (7, 8, 9) of the gabion, adjacent side and partition walls being connected to one another by pivotal connections (41) enabling the gabion to be folded between fully flattened and deployed configurations, wherein at least one of the pivotal connections (43) is a releasable connection which when released allows a side wall element to open with respect to the gabion to allow access from the side of the gabion to any contents of the gabion compartments.

No. of claims: 26 No. of figures: 9

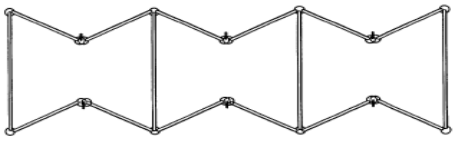

FIG.4b.



FIG.4c.

Note: Any interested individual may, within 3 months of publication of the grant, file objection thereof with the Grievance Committee after payment of grievance fees.

(19) pATENT OFFICE OF THE COOPERATION COUNCL FOR THE ARAB STATES OF THE GULF

(19) مكتب براءات الاختراع لمجلس التعاون لدول الخليج العربية

[12] **Patent**

[11] Patent No.: GC0001726 **[45] Date of Publishing the Grant of the Patent: 31/03/2012 17/2012**	**Number of the Decision to Grant the Patent: 11/26802** **Date of the Decision to Grant the Patent: 11/09/2011**
[21] Application No.: GCC/P/2007/8035 **[22] Filing Date: 31/03/2007** **[30] Priority:** **[31] Priority No. [32] Priority date [33] State** **60/787,588 30/03/2006 US** **[72] Inventors: 1- Susannah K FORD، 2- Karen Louise PHILPOTT، 3- Stephen Anthony BURBIDGE، 4- Jonathan Henry ELLIS، 5- Umesh KUMAR، 6- Volker GERMASCHEWSKI، 7- Peter Ernest SODEN** **[73] Owner: Glaxo Group Limited, Glaxo Wellcome House, Barkeley Avenue, Greenford, Middlesex, UB6 ONN, United Kingdom** **[74] Agent: Suleiman I. Al-Ammar**	**Int. CI.[7]: C07K16/18; A61P25/28; A61K39/395** **[56] Cited Documents:** **- WO 2004/080419 A (NEURALAB LTD; WYETH CORP [US]; BASI GURIQ [US]; SALDNHA JOSE W [GB]) 23 September 2004** **Examiner: Nouf Saleh Alnassban**

[54] ANTIBODIES

[57] Abstract: Antibodies that bind human β-amyloid peptide, methods of treating diseases or disorders characterised by elevated β- amyloid levels or β-amyloid deposits with said antibodies, pharmaceutical compositions comprising said antibodies and methods of manufacture.

No. of claims: 9

Note: Any interested individual may, within 3 months of publication of the grant, file objection thereof with the Grievance Committee after payment of grievance fees.

(19) pATENT OFFICE OF THE COOPERATION COUNCL FOR THE ARAB STATES OF THE GULF

(19) مكتب براءات الاختراع لمجلس التعاون لدول الخليج العربية

[12] Patent

[11] Patent No.: GC0001727 [45] Date of Publishing the Grant of the Patent: 31/03/2012 17/2012	Number of the Decision to Grant the Patent: 11/26757 Date of the Decision to Grant the Patent: 11/09/2011
[21] Application No.: GCC/P/2007/8043 [22] Filing Date: 31/03/2007 [30] Priority: [31] Priority No. [32] Priority date [33] State 06112036.6 30/03/2006 EP [72] Inventors: 1- Marc Moers، 2- Mathias Wijffels، 3- Lieven Van Looveren [73] Owner: Total Petrochemicals Research Feluy, Zone Industrielle C, B- 7181, SENEFFE, (Feluy) Belgium [74] Agent: Suleiman I. Al-Ammar	[51] Int. Cl.[7]: C08F10/00, 10/02, 10/00 [56] Cited Documents: - EP 1544218 A1 (BOREALIS TECHNOLOGY OY) 22 June 2005 - EP 0580930 A1 (FINA RESEARCH S.A) 02 February 1994 Examiner: Abdallah Ibrahim AL-Khatib

[54] METHOD FOR MAKING A TRANSITION BETWEEN POLYMER GRADES

[57] Abstract: The present invention relates to a method of transition between polymer grades in a polymerization process comprising polymerizing at least one monomer in at least a first reactor and a second reactor connected to each other in series, wherein the monomer feed in the first reactor maintained essentially constant during transition.

No. of claims: 8 No. of figures: 2

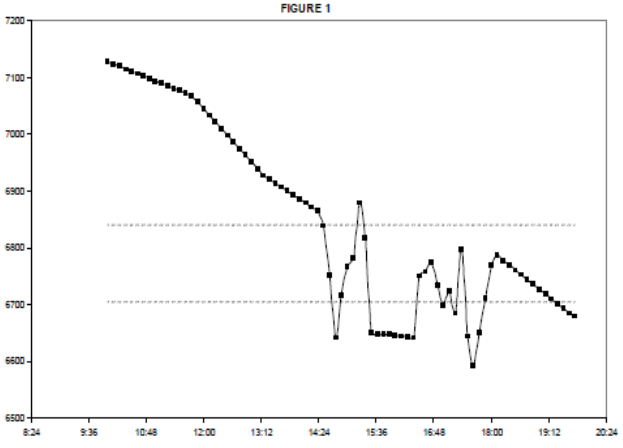

Note: Any interested individual may, within 3 months of publication of the grant, file objection thereof with the Grievance Committee after payment of grievance fees.

(19) pATENT OFFICE OF THE COOPERATION COUNCL FOR THE ARAB STATES OF THE GULF

(19) مكتب براءات الاختراع لمجلس التعاون لدول الخليج العربية

[12] **Patent**

[11] Patent No.: GC0001728 **[45] Date of Publishing the Grant of the Patent: 31/03/2012 17/2012**	**Number of the Decision to Grant the Patent: 11/26755** **Date of the Decision to Grant the Patent: 11/09/2011**
[21] Application No.: GCC/P/2007/8044 **[22] Filing Date: 31/03/2007** **[30] Priority:** **[31] Priority No. [32] Priority date [33] State** **06112030,9 30/03/2006 EP** **06121494,6 29/09/2006 EP** **[72] Inventors: 1- Mieke Dams، 2- Daniel Siraux** **[73] Owner: Total Petrochemicals Research Feluy, Zone Industrielle C, B-7181 Seneffe (Feluy) Beligum** **[74] Agent: Suleiman I. Al-Ammar**	**[51] Int. Cl.[7]: C08F 10/02, 297/08, 10/00, 297/00** **[56] Cited Documents:** **- US 6225421 B1 (PROMEL MICHEL [BE] et al.) 01 May 2001** **- EP 1630178 A (INNOVENE MFG BELGIUM NV [BE]) 01 March 2006** **- EP 1044995 A1 (DOW CHEMICAL CO [US] DOW GLOBAL TECHNOLOGIES INC [US]) 18 October 2000** **Examiner: Abdallah Ibrahim AL-Khatib**

[54] PROCESS FOR THE PREPARATION OF ETHYLENE POLYMERS USING A NUMBER OF REACTORS ARRANGED IN SERIES

[57] Abstract: The present invention relates to a process for the preparation of ethylene polymers using a number of reactors arranged in series comprising the steps in which

a) ethylene, a diluent, a catalyst, a co-catalyst and optionally comonomers and hydrogen are introduced into a first reactor,

b) polymerization of ethylene and optionally comonomers is carried out in the reaction mixture of said first reactor to make ethylene polymers,

c) reaction mixture is discharged from said first reactor,

d) said reaction mixture and fresh ethylene and optionally comonomers and hydrogen are introduced into the consecutive reactor to make additional ethylene polymers,

e) said reaction mixture is discharged from said consecutive reactor and introduced into the further consecutive reactor, if any, with fresh ethylene and optionally comonomers and hydrogen to make additional ethylene polymers, steps c) and d); are repeated until the last reactor of the series,

f) reaction mixture is discharged from last reactor of the series and ethylene polymers are recovered, wherein, additional co-catalyst is injected in at least a subsequent reactor of the series.

Advantage of the process of the present invention is mainly to decrease catalyst consumption for the same polyethylene production, in other words to increase the productivity. In a most preferred embodiment the process of the present invention is carried out in two loop reactors under slurry conditions.

No. of claims: 9

Note: Any interested individual may, within 3 months of publication of the grant, file objection thereof with the Grievance Committee after payment of grievance fees.

(19) pATENT OFFICE OF THE COOPERATION COUNCL FOR THE ARAB STATES OF THE GULF

(19) مكتب براءات الاختراع لمجلس التعاون لدول الخليج العربية

[12] **Patent**

[11] Patent No.: GC0001729 **[45] Date of Publishing the Grant of the Patent: 31/03/2012 17/2012**	**Number of the Decision to Grant the Patent: 11/26794** **Date of the Decision to Grant the Patent: 11/09/2011**
[21] Application No.: GCC/P/2007/8045 **[22] Filing Date: 31/03/2007** **[30] Priority:** **[31] Priority No. [32] Priority date [33] State** **06112117.4 31/03/2006 EP** **[72] Inventors: 1- Alain Brusselle، 2- Vincent Warichet، 3- Olivier Miserque** **[73] Owner: Total Petrochemicals Research Feluy, Zone Industrielle C, B-7181 Seneffe (Feluy) Beligum** **[74] Agent: Suleiman I. Al-Ammar**	**[51] Int. Cl.[7]: C08F 10/00, 2/00, 4/00, 10/02;** **[56] Cited Documents:** **- WO 2004/26463 A1 (ATOFINA RESEARCH; FOUARGE, LOUIS; LEWALLE ANDRE) 01 April 2004** **- WO 2005/080449 A (TOTAL PETROCHEMICALS RESEARCH FELUY; MISERQUE, OLIVIER; HORTMANN KAI;) 01 September 2005** **- US 5336738 A (HAVAS et al.) 09 August 1994** **- GB 992839 A (W. R. GRACE & CO) 19 May 1965** **- US 3367909 A (HAY RUSSELL G et al) 06 February 1968** **Examiner: Abdallah Ibrahim AL-Khatib**

[54] PROCESS TO KILL A CATALYZED OLEFIN POLYMERIZATION

[57] Abstract: Process to kill a continuous catalyzed olefin liquid phase polymerization in which the catalyst is a Ziegler-Natta or a metallocene catalyst, wherein, a predetermined amount of killing agent is injected into the reactor during at least twice the cycle time of the reactor.

No. of claims: 9

Note: Any interested individual may, within 3 months of publication of the grant, file objection thereof with the Grievance Committee after payment of grievance fees.

(19) pATENT OFFICE OF THE COOPERATION COUNCL FOR THE ARAB STATES OF THE GULF

(19) مكتب براءات الاختراع لمجلس التعاون لدول الخليج العربية

[12] **Patent**

[11] Patent No.: GC0001730 **[45] Date of Publishing the Grant of the Patent: 31/03/2012 17/2012**	**Number of the Decision to Grant the Patent: 11/26766** **Date of the Decision to Grant the Patent: 11/09/2011**
[21] Application No.: GCC/P/2007/8061 **[22] Filing Date: 02/04/2007** **[30] Priority:** **[31] Priority No. [32] Priority date [33] State** **06112155.4 03/04/2006 EP** **[72] Inventor: Daan Dewachter** **[73] Owner: Total Petrochemicals Research Feluy, Zone Industrielle C , B-7181 Seneffe, (Feluy) Belgium** **[74] Agent: Suleiman I. Al-Ammar**	**[51] Int. Cl.[7]: C08F 10/02, 2/14, 10/00, 2/12; B01J 19/24** **[56] Cited Documents:** **- US 2004/059070 A1 (WHITTE WILLIAM M et al.) 25 March 2004** **- US 3437646 A (JACK S. SCOGGIN) 08 April 1969** **- WO 2005/077994 (TOTAL PETROCHEMICALS RESEARCH FELUY; DAMME, ERIC) 25 August 2005** **- WO 2004/024682 A (CHEVRON PHILIPS CHEMICAL COMPANY LP) 25 March 2004** **Examiner: Abdallah Ibrahim AL-Khatib**

[54] PROCESS FOR IMPROVING THE POLYMERIZATION OF ETHYLENE AND ONE OR MORE OPTIONAL COMONOMERS IN A POLYMERIZATION LOOP REACTOR

[57] Abstract: The present invention relates to a process for improving the polymerization of ethylene and one or more optional co-monomer(s) in a polymerization loop reactor characterized in that said process comprises the step of controlling the hydrogen/monomer ratio along the path of the reactor by multiple, spatially separated, feeding of hydrogen along the path of the loop reactor. In particular, the invention provides a process for controlling, and preferably narrowing, the molecular weight distribution of the produced polymer particles. In another aspect, the invention relates to a polymerization loop reactor suitable for the polymerization process of ethylene and an optional olefin co-monomer, wherein the molecular weight distribution of the produced ethylene polymer can be controlled.

No. of claims: 10 **No. of figures: 2**

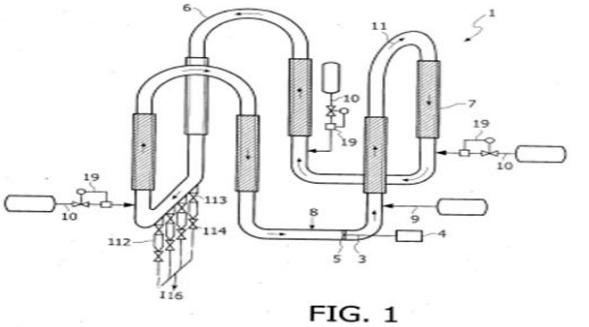

FIG. 1

Note: Any interested individual may, within 3 months of publication of the grant, file objection thereof with the Grievance Committee after payment of grievance fees.

(19) pATENT OFFICE OF THE COOPERATION COUNCL FOR THE ARAB STATES OF THE GULF

(19) مكتب براءات الاختراع لمجلس التعاون لدول الخليج العربية

[12] **Patent**

[11] Patent No.: GC0001731 **[45] Date of Publishing the Grant of the Patent: 31/03/2012 17/2012**	**Number of the Decision to Grant the Patent: 11/26790** **Date of the Decision to Grant the Patent: 11/09/2011**
[21] Application No.: GCC/P/2007/8283 **[22] Filing Date: 08/05/2007** **[30] Priority:** **[31] Priority No. [32] Priority date [33] State** **06009888.6 12/05/2006 Ep** **[72] Inventors: 1- Ermanno Filippi، 2- Tarozzo Mirco، 3- Rizzi Enrico** **[73] Owner: Methanol Casale S.A., Via Giulio Pocobelli, 6, CH-6900, Besso-Lugano, Switzerland** **[74] Agent: Suleiman I. Al-Ammar**	**[51] Int. Cl.[7]: B01J 8/02; G01M 3/22, 3/20** **[56] Cited Documents:** **- EP 1514594 A (METHANOL CASALE S.A) 16 March 2005** **- US 5976461 A (KOSTUCK et al.) 02 November 1999** **Examiner: Abdallah Ibrahim AL-Khatib**

[54] ISOTHERMAL REACTOR

[57] Abstract: The present invention concerns an isothermal reactor (1) comprising a pressure vessel (2) closed at the opposite ends by respective bottoms (3, 4), a reaction zone (9) in said pressure vessel (2) in which at least one catalytic basket (10) is positioned, and at least one heat exchange unit (13) embedded in said at least one catalytic basket (10), each heat exchange unit (13) comprising a plurality of heat exchangers (14) each having an inner chamber intended to be crossed by an operating heat exchange fluid, the reactor being characterised in that it comprises means (17, 18) for picking up samples of operating heat exchange fluid from groups (16) of pre-established exchangers in each heat exchange unit (13), so as to ascertain the possible existence of damaged exchangers (14) in said groups (16) of exchangers through analysis of respective samples of operating heat exchange fluid. The invention also concerns a method for detecting the existence of damaged heat exchangers in an isothermal reactor of the aforementioned type

No. of claims: 7 **No. of figures: 2**

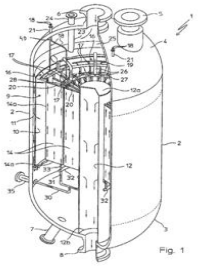

Note: Any interested individual may, within 3 months of publication of the grant, file objection thereof with the Grievance Committee after payment of grievance fees.

(19) pATENT OFFICE OF THE COOPERATION COUNCL FOR THE ARAB STATES OF THE GULF

(19) مكتب براءات الاختراع لمجلس التعاون لدول الخليج العربية

[12] **Patent**

[11] Patent No.: GC0001732 **[45] Date of Publishing the Grant of the Patent: 31/03/2012 17/2012**	**Number of the Decision to Grant the Patent: 11/26761** **Date of the Decision to Grant the Patent: 11/09/2011**
[21] Application No.: GCC/P/2007/8441 **[22] Filing Date: 05/06/2007** **[30] Priority:** **[31] Priority No. [32] Priority date [33] State** **202006008868.7 06/06/2006 DE** **[72] Inventor: Fuchs, Wolfgang** **[73] Owner: Sefar Ag Filtration Division, 2 Moosstrase, 8803, Ruschlikon, Switzerland** **[74] Agent: Suleiman I. Al-Ammar**	**[51] Int. Cl.[7]: D03D 11/00, 15/00** **[56] Cited Documents:** **- JP 1139839 A (SHOWA KOGYO KK) 01 June 1989** **Examiner: Abdallah Ibrahim AL-Khatib**

[54] FABRIC, IN PARTICULAR FOR TEXTILE STRUCTURES AND/OR COVERINGS

[57] Abstract: The invention relates to a woven fabric, in particular for textile buildings and/or covers, comprising warp threads and weft threads made from PTFE yarn, in which the warp thread number is at least approximately twice as great as the weft thread number. Furthermore, the invention relates to a method for producing a woven fabric, in which, when the warp threads are shot through, at least two individual threads which extend in parallel are at the same time guided through a shed of the warp threads.

No. of claims: 10 No. of figures: 1

Fig. 1

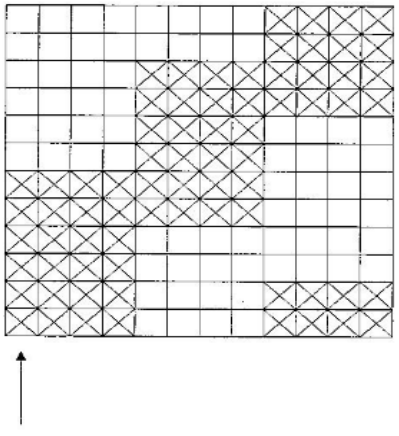

Note: Any interested individual may, within 3 months of publication of the grant, file objection thereof with the Grievance Committee after payment of grievance fees.

(19) pATENT OFFICE OF THE COOPERATION COUNCL FOR THE ARAB STATES OF THE GULF

(19) مكتب براءات الاختراع لمجلس التعاون لدول الخليج العربية

[12] **Patent**

[11] Patent No.: GC0001733 **[45] Date of Publishing the Grant of the Patent: 31/03/2012 17/2012**	**Number of the Decision to Grant the Patent: 11/26788** **Date of the Decision to Grant the Patent: 11/09/2011**
[21] Application No.: GCC/P/2007/8447 **[22] Filing Date: 06/06/2007** **[30] Priority:** **[31] Priority No. [32] Priority date [33] State** **11/503,042 11/08/2006 US** **[72] Inventors: 1- Rik B. Miller، 2- Curtis N. Eng** **[73] Owner: Kellogg Brown & Root LLC, 601 Jefferson Avenue, Texas 77002, Huston, USA** **[74] Agent: Suleiman I. Al-Ammar**	**Int. Cl.[7]: C10G35/14, 35/00** **[56] Cited Documents:** **- US6791002 B1(UOP LLC) 14 September 2004** **- US4311579 A (ENGELHARD MINERALS & CHEMICALS CORPORATION) 19 January 1982** **Examiner: Abdallah Ibrahim AL-Khatib**

[54] DUAL RISER FCC REACTOR PROCESS WITH LIGHT AND MIXED LIGHT/HEAVY FEEDS

[57] Abstract: A dual riser FCC process is disclosed wherein first and second hydrocarbon feeds (5, 6) are supplied to the respective first and second risers (2, 4) to make an effluent rich in ethylene, propylene and/or aromatics. Where the hydrocarbon feeds are different, the respective risers can have different conditions to favor conversion to ethylene and/or propylene. A minor amount of a coke precursor (80, 82) can be added to one or both of the hydrocarbon feeds (5, 6) to reduce or eliminate the amount of supplemental fuel needed to heat balance the system. The different feeds, including the coke precursor and any recycle streams (36, 44) can be segregated by type to improve olefin yields, including an embodiment where the paraffinic feeds are supplied to one riser and the olefinic feeds to the other.

No. of claims: 15 No. of figures: 3

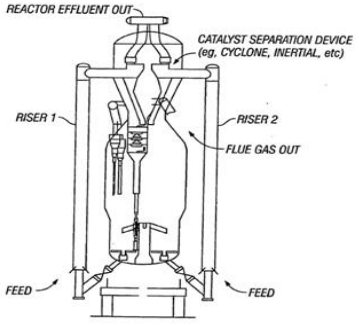

FIG. 1

Note: Any interested individual may, within 3 months of publication of the grant, file objection thereof with the Grievance Committee after payment of grievance fees.

(19) pATENT OFFICE OF THE COOPERATION COUNCL FOR THE ARAB STATES OF THE GULF

(19) مكتب براءات الاختراع لمجلس التعاون لدول الخليج العربية

[12] **Patent**

[11] Patent No.: GC0001734 **[45] Date of Publishing the Grant of the Patent: 31/03/2012 17/2012**	**Number of the Decision to Grant the Patent: 11/26819** **Date of the Decision to Grant the Patent: 11/09/2011**
[21] Application No.: GCC/P/2007/8704 **[22] Filing Date: 14/07/2007** **[30] Priority:** **[31] Priority No. [32] Priority date [33] State** **102006032635.0 13/07/2006 DE**	**[51] Int. Cl.[7]: C07C319/08 ; C07C321/04** **[56] Cited Documents:** **- WO 2005/021491 A (DEGUSSA [DE]) 10 March 2005** **- WO 2006/063669 A (DEGUSSA [DE]) 22 June 2006**
[72] Inventors: 1- Hubert Redlingshofer، 2- Christoph Weckbecker **[73] Owner: Degussa GmbH,-IPM-DG PAT,Bennigsenplatz 1, 40474 Dusseldorf ,Germany** **[74] Agent: Suleiman I. Al-Ammar**	**Examiner: Mohammad Al-Ismael**

[54] PROCESS FOR PREPARING ALKYL MERCAPTANS IN A MULTIZONE FIXED BED REACTOR

[57] Abstract: The invention relates to a process for preparing alkyl mercaptans by catalytic gas phase reaction of alkanols and hydrogen sulphide over alkali metal tungstates , the reaction being performed in at least two successive reaction zones which contain catalysts of different activity and selectivity.

No. of claims: 13

Note: Any interested individual may, within 3 months of publication of the grant, file objection thereof with the Grievance Committee after payment of grievance fees.

(19) pATENT OFFICE OF THE COOPERATION COUNCL FOR THE ARAB STATES OF THE GULF

(19) مكتب براءات الاختراع لمجلس التعاون لدول الخليج العربية

[12] **Patent**

[11] Patent No.: GC0001735 **[45] Date of Publishing the Grant of the Patent: 31/03/2012 17/2012**	**Number of the Decision to Grant the Patent: 11/27246** **Date of the Decision to Grant the Patent: 14/09/2011**
[21] Application No.: GCC/P/2007/8755 **[22] Filing Date: 23/07/2007** **[30] Priority:** **[31] Priority No. [32] Priority date [33] State** **60/820,417 26/07/2006 US** **11/765,484 20/06/2007 US**	**[51] Int. Cl.[7]: G01V 3/32** **[56] Cited Documents:** **- US 6808028B2 (WOODBURN CHARLES et al.) 26 October 2004**
[72] Inventors: 1- Henry N. Bachman، 2- Jack A. La Vigne، 3- Ralf Heidler، 4- Nicholas J. Heaton **[73] Owner: Schlumberger Technology B.V., Parkstraat 83-89, 2514 JG, The Hauge, The Netherlands** **[74] Agent: Suleiman I. Al-Ammar**	**Examiner: Mohammed A. Aljaffar**

[54] METHOD FOR ANALYZING DATA HAVING SHARED AND DISTINCT PROPERTIES

[57] Abstract: A method to determine formation properties using two or more data sets in which the solutions corresponding to the data sets represent shared and distinct formation properties. The method analyzes the data sets and computes distributions for the shared and distinct formation properties from which the formation properties are determined.

No. of claims: 19 No. of figures: 4

Note: Any interested individual may, within 3 months of publication of the grant, file objection thereof with the Grievance Committee after payment of grievance fees.

(19) pATENT OFFICE OF THE COOPERATION COUNCL FOR THE ARAB STATES OF THE GULF

(19) مكتب براءات الاختراع لمجلس التعاون لدول الخليج العربية

[12] Patent

[11] Patent No.: GC0001736 **[45] Date of Publishing the Grant of the Patent: 31/03/2012 17/2012**	**Number of the Decision to Grant the Patent: 11/26817** **Date of the Decision to Grant the Patent: 11/09/2011**
[21] Application No.: GCC/P/2007/9430 **[22] Filing Date: 07/11/2007** **[30] Priority:** **[31] Priority No. [32] Priority date [33] State** **2006/305066 10/11/2006 JP** **[72] Inventors: 1- Kunihito Miyake، 2- Kenji Kimura، 3- Hideo Narahara** **[73] Owner: Sumitomo Chemical Company , Limited, Shinkawa ,chome -2 ,ku-Chuo ,-8260-104 ,Tokyo, Japan** **[74] Agent: Suleiman I. Al-Ammar**	**[51] Int. Cl.[7]: C07F 9/6574, 9/00 C08K 5/527, K5/00** **[56] Cited Documents:** **- EP 0400454 A (GEN ELECTRIC [US]) 05 December 1990** **- EP 0823435 A2 SUMITOMO CHEMICAL CO [JP] 11 February 1998** **Examiner: Mohammad Al-Ismael**

[54] PHOSPHITE COMPOSITION AND METHOD FOR PRODUCING THE SAME

[57] Abstract: There is provided a phosphite composition comprising 100 parts by weight of a phosphite represented by the formula (1) and 0.5 to 8 parts by weight of an aliphatic hydrocarbon lubricant having a softening point or a melting point of not higher than 115ºC, wherein the content of the phosphite (1) in said composition is 30 to 99.5% by weight.

No. of claims: 8 No. of figures: 1

Note: Any interested individual may, within 3 months of publication of the grant, file objection thereof with the Grievance Committee after payment of grievance fees.

(19) pATENT OFFICE OF THE COOPERATION COUNCL FOR THE ARAB STATES OF THE GULF

(19) مكتب براءات الاختراع لمجلس التعاون لدول الخليج العربية

[12] **Patent**

[11] Patent No.: GC0001737 **[45] Date of Publishing the Grant of the Patent: 31/03/2012 17/2012**	**Number of the Decision to Grant the Patent: 11/24813** **Date of the Decision to Grant the Patent: 15/06/2011**
[21] Application No.: GCC/P/2006/7176 **[22] Filing Date: 08/11/2006** **[30] Priority:** **[31] Priority No. [32] Priority date [33] State** **0522943,0 10/11/2005 GB** **[72] Inventors: 1- Julie Hardy، 2- Chris Jones** **[73] Owner: Rhodia UK Limited, Oak House, Reeds Cresent, Watford, Hertfordshire WD24 4QP, United Kingdom** **[74] Agent: Saud M. A. Shawwaf**	**[51]Int. Cl.[7]: C02F 5/14, 1/50** **[56] Cited Documents:** **- WO 02/08127 A (RHODIA CONS SPEC LTD [GB]; FIDOE STEPHEN DAVID [GB]; TALBOT ROBERT ERI) 31 January 2002** **Examiner: Yahiya Naser Al-BuSafi**

[54] CORROSION INHIBITION

[57] Abstract: A formulation for the treatment of aqueous systems, comprising a tetrakis (hydroxyorgano) phosphonium salt (THP^+ salt) and an alkyl phosphonic acid C6-C12. There is further a method for treatment of an aqueous system while concomitantly inhibiting the corrosion of surfaces in contact with said aqueous system, which method comprises the addition, simultaneously, sequentially or separately, of an effective amount of a THP^+ salt and an alkyl phosphonic acid.

No. of claims: 13

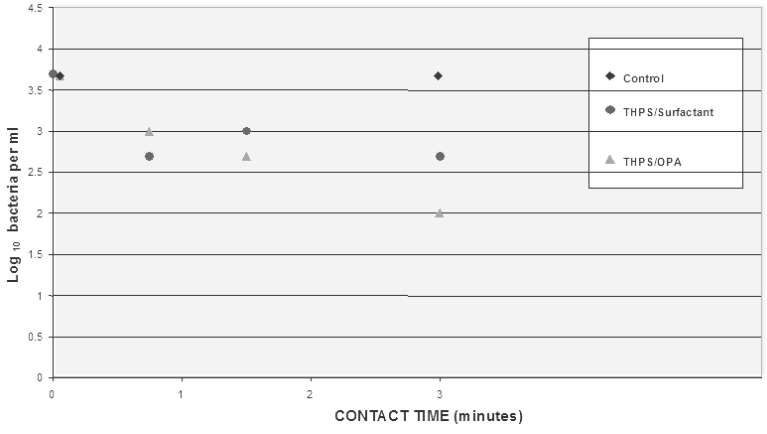

Note: Any interested individual may, within 3 months of publication of the grant, file objection thereof with the Grievance Committee after payment of grievance fees.

(19) pATENT OFFICE OF THE COOPERATION COUNCL FOR THE ARAB STATES OF THE GULF

(19) مكتب براءات الاختراع لمجلس التعاون لدول الخليج العربية

[12] **Patent**

[11] Patent No.: GC0001738 **[45] Date of Publishing the Grant of the Patent: 31/03/2012 17/2012**	**Number of the Decision to Grant the Patent: 11/26858** **Date of the Decision to Grant the Patent: 11/09/2011**
[21] Application No.: GCC/P/2005/5594 **[22] Filing Date: 21/12/2005** **[30] Priority:** **[31] Priority No. [32] Priority date [33] State** **0413873 23/12/2004 FR** **0503252 01/04/2005 FR** **0503254 01/04/2005 FR** **[72] Inventors: 1- Mr. Michel Strebelle، 2- Mr. Dominique Balthasart، 3 - Mr. Michel Lempereur** **[73] Owner: Solvay, 33 Rue Du Prince Albert, 1050 Brussels, Belgium** **[74] Agent: Suleiman I. Al-Ammar**	**[51] Int. Cl.[7]: C07C 17/156, 19/045, 17/25, 21/06; C08F 14/06** **[56] Cited Documents:** **- WO 03/048088 A (BASF AKTIENGESELLSCHAFT; HARTH, KLAUS; SCHINDLER, GOETZ-PETER; WALSDOR) 12 June 2003** **- WO 00/26164 A (SOLVAY; STREBELLE, MICHEL PETITJEAN, ANDRE) 11 May 2000** **- J. L. KOOLEN: "Chapter 7 Optimization of an Integrated Complex of Process Plants and Evaluation of its Vulnerabilites" Design Of Simple And Robust Process Plants, [Online] 2002** **- Ep 0567381 (Elf Atochem S.A) 27 October 1993** **- Heinz Zimmermann et al.: "Ethylene" Dullmann`S Encyclopedia Of Industrial Chemistry- John Wiley & Sons, Inc., [Online] 15 June 2000** **Examiner: Fahed Zoaid AlMutairi**

[54] PROCESS FOR THE MANUFACTURE OF 1,2-DICHLOROETHANE

[57] Abstract:Process for the manufacture of 1,2-dichloroethane starting with a hydrocarbon source according to which :

a) the hydrocarbon source is subjected to cracking which produces a mixture of products containing ethylene and other constituents;

b) the mixture of products containing ethylene is conveyed to at least one storage reservoir;

c) a chlorination reactor and/or an oxychlorination reactor is (are) supplied with the previously stored mixture of products containing ethylene, in which reactors most of the ethylene present is converted to 1,2-dichloroethane;

d) the 1,2-dichloroethane obtained is separated from the streams of products derived from the chlorination and oxychlorination reactors.

No. of claims: 14 No. of figures: 1

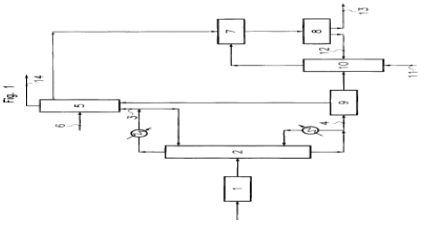

Note: Any interested individual may, within 3 months of publication of the grant, file objection thereof with the Grievance Committee after payment of grievance fees.

(19) pATENT OFFICE OF THE COOPERATION COUNCL FOR THE ARAB STATES OF THE GULF

(19) مكتب براءات الاختراع لمجلس التعاون لدول الخليج العربية

[12] **Patent**

[11] Patent No.: GC0001739 **[45] Date of Publishing the Grant of the Patent: 31/03/2012 17/2012**	**Number of the Decision to Grant the Patent: 11/26856** **Date of the Decision to Grant the Patent: 11/09/2011**
[21] Application No.: GCC/P/2005/5595 **[22] Filing Date: 21/12/2005** **[30] Priority:** **[31] Priority No. [32] Priority date [33] State** **0413873 23/12/2005 FR** **0503252 01/04/2005 FR** **0503253 01/04/2005 FR** **[72] Inventors: 1- Mr. Dominique Balthasart، 2- Mr. Michel Strebelle** **[73] Owner: Solvay, 33 Rue Du Prince Albert, 1050 Brussels, Belgium** **[74] Agent: Suleiman I. Al-Ammar**	**[51] Int. Cl.[7]: C07C 17/156, 19/045, 17/25, 21/06; C08F 14/06** **[56] Cited Documents:** **- WO 00/26164 A (SOLVAY; STEBELLE, MICHEL; PETITJEAN, ANDRE) 11 May 2000** **- HEINZ ZIMMERMANN et al.: "Ethylene" Ullmann`S Encyclopedia Of Industrial Chemistry – John Wiley & Sons, Inc, [Online] 15 June 2000** **- Msnfred Rossberg et al.: "Chlorinated Hydrocarbons- 3. Chloroethylenes" Ullmann`S Encyclopedia Of Industrial Chemstry- John Wiley & Sons, [Online] 15 June 2000** **- WO 96/35653 A (PPG INDUSTRIES, INC) 14 November 1996** **- Manfred Rossberg et al.: "Chlorinated Hydrocarbons-2. Chloroethanes" Ullmann`S Encyclopedia Of Industrial Chemstry- John Wiley & Sons, [Online] 15 June 2000** **- US 5891346 A (HUNTLEY et al.) 06 April 1999** **- US 4417986 A (CONNAUGHT et al.) 29 November 1983** **Examiner: Fahed Zoaid AlMutairi**

[54] PROCESS FOR THE MANUFACTURE OF 1,2-DICHLOROETHANE

[57] Abstract: Process for the manufacture of 1,2-dichloroethane starting with a hydrocarbon source according to which :

a) the hydrocarbon source is subjected to a first cracking step, namely a pyrolysis step carried out in a cracking oven, thus producing a mixture of cracking products;

b) the said mixture of cracking products is subjected to a succession of treatment steps which make it possible to obtain a mixture of products containing ethylene and other constituents, among which an aqueous quenching step, an alkaline washing step aimed at removing at least most of the carbon dioxide generating an alkaline solution and an oxidation step aimed at removing the hydrogen sulphide contained in the mixture of cracking products;

c) the mixture of products containing ethylene derived from step b) is separated into at least one fraction containing ethylene and into a heavy fraction;

d) the fraction(s) containing ethylene is (are) conveyed to a chlorination reactor and/or an oxychlorination reactor, in which reactors most of the ethylene present is converted to 1,2-dichloroethane;

e) the 1,2-dichloroethane obtained is separated from the streams of products derived from the chlorination and oxychlorination reactors.

No. of claims: 15

Note: Any interested individual may, within 3 months of publication of the grant, file objection thereof with the Grievance Committee after payment of grievance fees.

(19) pATENT OFFICE OF THE COOPERATION COUNCL FOR THE ARAB STATES OF THE GULF

(19) مكتب براءات الاختراع لمجلس التعاون لدول الخليج العربية

[12] **Patent**

[11] Patent No.: GC0001740 **[45] Date of Publishing the Grant of the Patent: 31/03/2012 17/2012**	**Number of the Decision to Grant the Patent: 11/26854** **Date of the Decision to Grant the Patent: 11/09/2011**
[21] Application No.: GCC/P/2005/5596 **[22] Filing Date: 21/12/2005** **[30] Priority:** **[31] Priority No. [32] Priority date [33] State** **0413873 23/12/2004 FR** **0503252 01/04/2005 FR** **0503258 01/04/2005 FR** **[72] Inventors: 1- Mr. Michel Strebelle،** **2- Mr. Dominique Balthasart** **[73] Owner: Solvay, 33 Rue Du Prince Albert, 1050 Brussels, Belgium** **[74] Agent: Suleiman I. Al-Ammar**	**[51] Int. Cl.[7]: C07C 17/156, 17/02, 19/045, 17/25, 21/06; C08F14/06** **[56] Cited Documents:** **- US 6437204 B1 (BENJE MICHAEL et al.) 20 August 2002** **- Heinz Zimmermann et al.: " Ethylene-5. Production" Ullmann`S Encyclopedia Of Industrial Chemistry- John Wiley & Sons, Inc, [Online] 15 June 2000** **- WO 03/048088 A (BASF AKTIENGESELLSCHAFT; HARTH, KLAUS; SCHINDELR, GOETZ-PETER; WALSDOR) 12 June 20003** **- EP 0567381 A (ELF ATOCHEM S.A) 27 October 1993** **Examiner: Fahed Zoaid AlMutairi**

[54] PROCESS FOR THE MANUFACTURE OF 1,2-DICHLOROETHANE

[57] Abstract: Process for the manufacture of 1,2-dichloroethane starting with a hydrocarbon source according to which:

a) the hydrocarbon source is subjected to cracking which produces a mixture of products containing ethylene and other constituents;

b) the said mixture of products is separated into at least one fraction containing ethylene and into a heavy fraction (fraction C);

c) the fraction or fractions containing ethylene are conveyed to a chlorination reactor and/or to an oxychlorination reactor, in which reactors most of the ethylene present is converted to 1,2-dichloroethane;

d) the 1,2-dichloroethane obtained is separated from the streams of products derived from the chlorination and oxychlorination reactors and it is conveyed to the pyrolysis oven; and

e) the fraction C is conveyed to cracking or to the oven for pyrolysis of 1,2-dichloroethane as fuel.

No. of claims: 15 No. of figures: 1

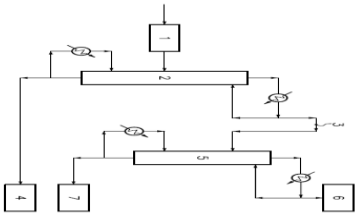

Note: Any interested individual may, within 3 months of publication of the grant, file objection thereof with the Grievance Committee after payment of grievance fees.

(19) pATENT OFFICE OF THE COOPERATION COUNCL FOR THE ARAB STATES OF THE GULF

(19) مكتب براءات الاختراع لمجلس التعاون لدول الخليج العربية

[12] **Patent**

[11] Patent No.: GC0001741 **[45] Date of Publishing the Grant of the Patent: 31/03/2012 17/2012**	**Number of the Decision to Grant the Patent: 11/24488** **Date of the Decision to Grant the Patent: 05/06/2011**
[21] Application No.: GCC/P/2006/6301 **[22] Filing Date: 23/05/2006** **[30] Priority:** **[31] Priority No. [32] Priority date [33] State** **0510697.6 25/05/2005 GB** **[72] Inventors: 1- George Mark Allen، 2- John Robert Harrison، 3- Tom Doherty، 4- Daniel Richardson** **[73] Owner: Novar ED & S Ltd, Glascoed Road,Asaph .St , Denbighshire, ER0 17LL, North Wales, United Kingdom** **[74] Agent: Saud M. A. Shawwaf**	**[51] Int. Cl.[7]: H02G3/04** **[56] Cited Documents:** **- US 6323421 B1 (PAWSON STEVEN E et al.) 27 November 2001** **Examiner: Fahad M. al-Baker**

[54] CORNER FITTING FOR A CABLE TRUNKING SYSTEM

[57] Abstract: There is described a corner fitting for connecting two sections of a cable trunking system that extend to either side of an external corner, the two sections having aligned compartments for containing a cable. The corner fitting comprises respective aligned end apertures for interfacing with the compartments of the two sections of adjacent trunking, and a corner compartment extending between the aligned end apertures. The corner compartment comprises a stop member positioned out of alignment with the aligned end apertures for guiding the cable between the aligned compartments of the two sections of adjacent trunking around the corner fitting and for deflecting the cable along the length of the corner. The stop member is positioned for stopping the cable from being pulled back into alignment. There is also described a cable trunking assembly comprising such a corner fitting.

No. of claims: 20 No. of figures: 5

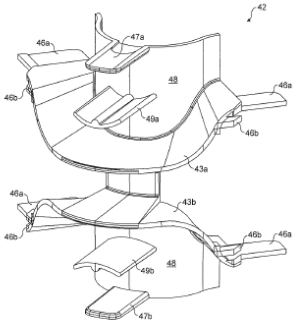

Note: Any interested individual may, within 3 months of publication of the grant, file objection thereof with the Grievance Committee after payment of grievance fees.

(19) pATENT OFFICE OF THE COOPERATION COUNCL FOR THE ARAB STATES OF THE GULF

(19) مكتب براءات الاختراع لمجلس التعاون لدول الخليج العربية

[12] **Patent**

[11] Patent No.: GC0001742 **[45] Date of Publishing the Grant of the Patent: 31/03/2012 17/2012**	**Number of the Decision to Grant the Patent: 11/25818** **Date of the Decision to Grant the Patent: 11/07/2011**
[21] Application No.: GCC/P/2005/5572 **[22] Filing Date: 21/12/2005** **[30] Priority:** **[31] Priority No. [32] Priority date [33] State** **0413751 22/12/2004 FR** **[72] Inventor: Henri Paradowski** **[73] Owner: Technip France,Alee de ‹8-6 ‹ ‹ZAC Danton-Faubourg de LArche ‹LArche Courbevoie - ‹92400, France** **[74] Agent: Saud M. A. Shawwaf**	**[51] Int. Cl.[7]: F25J 3/00** **[56] Cited Documents:** **- US 6516631B1 (MARK A. TREBBLE) 11 February 2003** **- US 4368061A (COMPAGNIE FRANCAISE D' ETUDES ET DE CONSTRUCTION TECHNIP) 11 January 1983** **- WO 03/100334A1(FLOOR TECHNOLOGIES CORPORATION) 04 December 2003** **Examiner: Ahmed Saleem Al- Hinai**

[54] METHOD AND INSTALLATION FOR PRODUCING TREATED NATURAL GAS, A C3+ HYDROCARBON CUT AND AN ETHANE RICH STREAM

[57] Abstract: This method comprises the cooling of the initial natural gas (13) and its introduction into a column (35) for recovering $C2^+$ hydrocarbons. It comprises the recovery of the top stream (131) from the column (35) to form the treated natural gas (15) , and the recovery of the bottom stream (171) from the column (35) for introducing it at a feed level (PI) of a fractionating column (61) equipped with a top condenser (63) . The column (61) produces the said $C3^+$ hydrocarbons (17) at the bottom. The method comprises the recovery of the ethane rich stream (19) from an intermediate level (P2) of the column (61) located above the said feed level (PI) and the production of a secondary reflux stream (191) from the said top condenser (63) refluxed to the top of the recovery column (35).

No. of claims: 15 No. of figures: 1

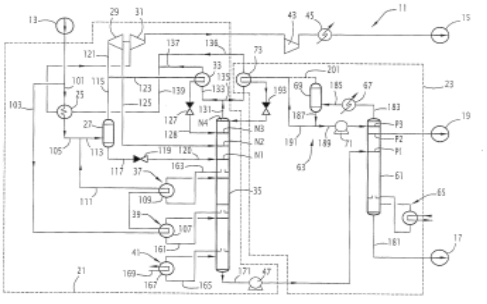

Note: Any interested individual may, within 3 months of publication of the grant, file objection thereof with the Grievance Committee after payment of grievance fees.

(19) pATENT OFFICE OF THE COOPERATION COUNCL FOR THE ARAB STATES OF THE GULF

(19) مكتب براءات الاختراع لمجلس التعاون لدول الخليج العربية

[12] **Patent**

[11] Patent No.: GC0001743 **[45] Date of Publishing the Grant of the Patent: 31/03/2012 17/2012**	**Number of the Decision to Grant the Patent: 11/25822** **Date of the Decision to Grant the Patent: 11/07/2011**
[21] Application No.: GCC/P/2006/7357 **[22] Filing Date: 09/12/2006** **[30] Priority:** **[31] Priority No. [32] Priority date [33] State** **60/753.160 22/12/2005 US** **[72] Inventors: 1- James R. Bragg، 2- Sergio A. Leonardi، 3- Robert D. Kaminsky** **[73] Owner: ExxonMobil Upstream Research Company,Texas ،2189 ،Houston ،2489 ,77252 ,Texas, USA** **[74] Agent: Saud M. A. Shawwaf**	**[51] Int. Cl. (2008.01): C09K 3/00; C09K 8/60** **[56] Cited Documents:** **- US 5076357 A (MARQUIS) 31 December 1991** **- US 2003/0139299 A1 (BRAGG et al.) 24 July 2003** **Examiner: Ahmed Saleem Al- Hinai**

[54] Method of Oil Recovery Using a Foamy Oil-External Emulsion

[57] Abstract: An improved method is provided for recovering hydrocarbons. In one or more embodiments, a method is provided for producing hydrocarbons from a subterranean formation in which a solids-stabilized emulsion (SSE) is formed, the SSE comprising oil as a first liquid, droplets of a second liquid suspended in the oil, and solid particles that are insoluble in both the oil and the second liquid at the conditions of the subterranean formation. The SSE is exposed to gas so as to dissolve gas in the oil. Alternatively , the gas may be dissolved in the oil prior to formation of the emulsion. An SSE having the gas dissolved therein is thus formed. The SSE with dissolved gas is injected into the subterranean formation as a drive fluid, and at least a portion of the SSE is placed into one or more areas of the subterranean formation having an in situ pressure sufficiently lower than the selected partial pressure to permit evolution of at least a portion of the gas from the oil. Gas bubbles are thereby formed in the oil within the subterranean formation. The gas bubbles may produce a foamy solids-stabilized emulsion (foamy SSE) in situ in the formation. The foamy SSE can be used as a drive fluid to produce hydrocarbons from said subterranean formation. A method for making the foamy SSE is also provided.

No. of claims: 36

Note: Any interested individual may, within 3 months of publication of the grant, file objection thereof with the Grievance Committee after payment of grievance fees.

(19) pATENT OFFICE OF THE COOPERATION COUNCL FOR THE ARAB STATES OF THE GULF

(19) مكتب براءات الاختراع لمجلس التعاون لدول الخليج العربية

[12] **Patent**

[11] Patent No.: GC0001744 **[45] Date of Publishing the Grant of the Patent: 31/03/2012 17/2012**	**Number of the Decision to Grant the Patent: 11/26937** **Date of the Decision to Grant the Patent: 12/09/2011**
[21] Application No.: GCC/P/2006/6981 **[22] Filing Date: 27/09/2006** **[30] Priority:** **[31] Priority No. [32] Priority date [33] State** **11/241.016 30/09/2006 US**	**[51] Int. Cl.[7]: B01J 19/00, 19/18, 19/24** **[56] Cited Documents:** **- US 6723804 B1 (BATTISTE DAVID R [US]) 20 April 2004** **- WO 2004/026455 A2 (CHEVRON PHILLIPS CHEMICAL CO [US]) 01 April 2004** **- WO 2005/068516 A2 (CHEVRON PHILIPS CHEMICAL CO [US]; BATTISTE DAVID R [US]) 28 July 2005**
[72] Inventors: 1- Max P. McDaniel، 2- John D. Hottovy، 3- David H. Burns، 4- Dale A. Zellers (Deceased, Penny A. Zellers)، 5- Donald W. Verser، 6- Jerry T. Lanier، 7- Elizabeth A. Benham، 8- David A. Lockman، 9- Klay K. Thurman، 10- Thomas H. Smith، 11- Matthew G. Thorn، 12- John O. Lawmaster، 13- Matthew T. Haberly **[73] Owner: Chevron Phillips Chemical Company LP, 10001 Six Pines Drive, The Woodlands, 77380, Texas, USA** **[74] Agent: Saud M. A. Shawwaf**	**Examiner: Abdallah Ibrahim AL-Khatib**

[54] MULTIPLE COMPONENT FEED METHODS AND SYSTEMS

[57] Abstract: Multiple components are selected, conveyed, and measured in a polymerization system. A control system adjusts the system variables to the desired values. Portions of the components can be fed to a pre-contactor before introduction into the polymerization reactor. The catalyst component concentrations and residence times are tightly controlled in the pre-contactor to affect product properties. The pre-contactor can be a single or multiple combinations of a CSTR or plug flow pre-contactors.

No. of claims: 21 No. of figures: 4

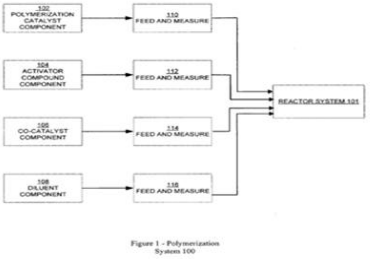

Figure 1 - Polymerization System 100

Note: Any interested individual may, within 3 months of publication of the grant, file objection thereof with the Grievance Committee after payment of grievance fees.

(19) pATENT OFFICE OF THE COOPERATION COUNCL FOR THE ARAB STATES OF THE GULF

(19) مكتب براءات الاختراع لمجلس التعاون لدول الخليج العربية

[12] Patent

[11] Patent No.: GC0001745 [45] Date of Publishing the Grant of the Patent: 31/03/2012 17/2012	Number of the Decision to Grant the Patent: 11/26935 Date of the Decision to Grant the Patent: 12/09/2011
[21] Application No.: GCC/P/2007/8522 [22] Filing Date: 16/06/2007 [30] Priority: [31] Priority No. [32] Priority date [33] State 11/473,732 23/06/2006 US [72] Inventors: 1- Scott T. Milner،2- robert N. Webb،3- Michael F. McDonald،4- Richard Dwight Hembree،5- Timothy D. Shaffer [73] Owner: Exxonmobil Chemical Patents Inc., 5200 Bayway Drive, Baytown, 77520, Texas, USA [74] Agent: Saud M. A. Shawwaf	[51] Int. Cl.[7]: C08F 6/00,1/02, 21/00, 23/00, 6/00 [56] Cited Documents: - US 3023191 A (ESSO RESEARCH AND ENGINEERNIG COMPANY) 27 February 1962 - US 3257349 A (ESSO RESEARCH AND ENGINEERNIG COMPANY) 21 June 1966 Examiner: Abdallah Ibrahim AL-Khatib

[54] A PROCESS TO PRODUCE A HYDROCARBON RUBBER CEMENT UTILIZING A HYDROFLUOROCARBON DILUENT

[57] Abstract: Provided for herein is a process to produce an essentially homogeneous single liquid phase hydrocarbon-rubber cement from a polymer slurry comprising a hydrocarbon-rubber, a diluent, and unreacted monomer(s), the process comprising:

(a)contacting the polymer slurry with a hydrocarbon solvent; and

(b) removing the diluent in amounts not sufficiently more than is necessary to produce the essentially homogeneous single liquid phase hydrocarbon-rubber cement wherein the mass fraction of monomer(s) in the hydrocarbon-rubber cement, based on the total amount of hydrocarbon-rubber present in the hydrocarbon-rubber cement, is less than the mass fraction of monomer(s) in the hydrocarbon-rubber slurry, based on the total amount of hydrocarbon-rubber present in the hydrocarbon-rubber slurry,

wherein the diluent comprises a hydrofluorocarbon.

No. of claims: 32 No. of figures: 1

Figure 1

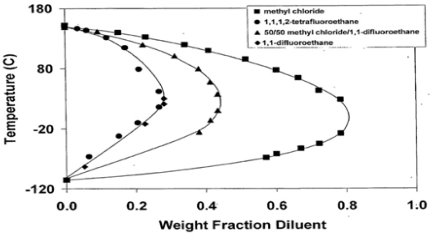

Note: Any interested individual may, within 3 months of publication of the grant, file objection thereof with the Grievance Committee after payment of grievance fees.

(19) pATENT OFFICE OF THE COOPERATION COUNCL FOR THE ARAB STATES OF THE GULF

(19) مكتب براءات الاختراع لمجلس التعاون لدول الخليج العربية

[12] Patent

[11] Patent No.: GC0001746 [45] Date of Publishing the Grant of the Patent: 31/03/2012 17/2012	Number of the Decision to Grant the Patent: 11/27404 Date of the Decision to Grant the Patent: 15/09/2011
[21] Application No.: GCC/P/2006/6667 [22] Filing Date: 26/07/2006 [30] Priority: [31] Priority No. [32] Priority date [33] State 11/189,388 26/07/2005 US [72] Inventors: 1- GUO, Pingjun، 2- Riley, Steve ،3- Trcka , Darryl E [73] Owner: Baker Hughes Incorporated, Essex Lane, Suite 1200,3900,P.O Box 4740, Texas 77210-4740, Houston, USA [74] Agent: Saba & Co. T.M.P	[51] Int. Cl.[7]: G01V 5/10 [56] Cited Documents: - US 2003/0178560 A1 (ODOM,R.C. et al) 25 September 2003 - US 4833914 A (RASMUS,JOHN) 30 May 1989 - US 4524274 A (SCOTT, H.D) 18 January 1985 Examiner: Mohammed A. Aljaffar

[54] MEASUREMENT OF FORMATION GAS SATURATION IN CASED WELLBORES USING PULSED NEUTRON INSTRUMENTATION

[57] Abstract: A pulsed neutron tool with three or more detectors is used for making measurements inside casing. The measurements may be used to determine gas saturation at a constant gas pressure, pressure at constant gas saturation, or to determine both gas saturation and gas pressure.

No. of claims: 25 No. of figures: 10

Note: Any interested individual may, within 3 months of publication of the grant, file objection thereof with the Grievance Committee after payment of grievance fees.

(19) pATENT OFFICE OF THE COOPERATION COUNCL FOR THE ARAB STATES OF THE GULF

(19) مكتب براءات الاختراع لمجلس التعاون لدول الخليج العربية

[12] **Patent**

[11] Patent No.: GC0001747 **[45] Date of Publishing the Grant of the Patent: 31/03/2012 17/2012**	**Number of the Decision to Grant the Patent: 11/25753** **Date of the Decision to Grant the Patent: 11/07/2011**
[21] Application No.: GCC/P/2006/7541 **[22] Filing Date: 25/12/2006** **[30] Priority:** **[31] Priority No. [32] Priority date [33] State** **11/294.036 05/12/2005 US** **[72] Inventors: 1- Randolph M.Charron، 2- Thomas D. Wood** **[73] Owner: Xtreme Coil Drilling CORP.,1402-500 4th Ave. S.W., Calgary Alberta , T2P 2V6, Canada** **[74] Agent: Ahmed Najdat Bazarbashe**	**[51] Int. Cl.[7]: E21B 19/22** **[56] Cited Documents:** **- US 2004/0206551A1 (CARRIERE, GENE et al.) 21 October 2004** **Examiner: Ahmed Saleem Al- Hinai**

[54] COILED TUBING /TOP DRVIE RIG AND METHOD

[57] Abstract: The rig for selectively inserting coiled tubing or a threaded tubular through a rig floor 13 and into a well includes a mast 15 extending upward from the rig floor and movable between a threaded tubular position and a coiled tubing 5 position. A top drive 21 is movable along an axis of the mast to insert the threaded tubular in the well when a top drive axis 42 is substantially aligned with the axis 44 of the well. Injector 17 supported on the mast inserts coiled tubing into the well, with the injector having an axis 46 offset from the top drive axis and substantially aligned with the axis of the well when the mast is in the coiled 10 tubing position. A powered drive 54 is provided for selectively moving the mast between the threaded tubular position and the coiled tubing position.

No. of claims: 35 No. of figures: 14

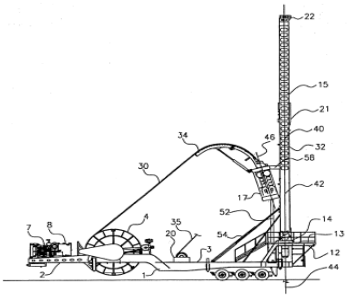

Note: Any interested individual may, within 3 months of publication of the grant, file objection thereof with the Grievance Committee after payment of grievance fees.

(19) pATENT OFFICE OF THE COOPERATION COUNCL FOR THE ARAB STATES OF THE GULF

(19) مكتب براءات الاختراع لمجلس التعاون لدول الخليج العربية

[12] **Patent**

[11] Patent No.: GC0001748 **[45] Date of Publishing the Grant of the Patent: 31/03/2012 17/2012**	**Number of the Decision to Grant the Patent: 11/25751** **Date of the Decision to Grant the Patent: 11/07/2011**
[21] Application No.: GCC/P/2001/1614 **[22] Filing Date: 01/09/2001** **[30] Priority:** **[31] Priority No. [32] Priority date [33] State** **60/229,486 31/08/2000 US** **[72] Inventors: 1- Steve Brown، 2- Eugene Buth، 3- Hayes E. Ross، 4- Roger Bligh** **[73] Owner: The Texas A&M University System, Mail Stop 3369, College Station, Texas 77843, USA** **[74] Agent: Ahmed Najdat Bazarbashe**	**[51] Int. Cl.[7]: E01F 14/14** **[56] Cited Documents:** **- US 5078366 A (SICKING et al.) 07 January 1992** **- US 577675 A (SICKING et al.) 07 July 1998** **Examiner: Mousa'ab A. AlFadhala**

[54] ET-PLUS : HEAD ASSEMBLY FOR GUARDRAIL EXTRUDER TERMINAL

[57] Abstract: A head assembly for guardrail extruder terminal device. A head assembly is described that is lighter and more effective than prior art head assemblies. The head assembly provides a squeezing throat that receives a corrugated guardrail and flattens it. A curved plate contacts the flattened rail and extrudes it away from the head assembly. The squeezing throat is constructed from a pair of side members. The first side member is an elongated, S-shaped plate while the second side member is a short curved plate. The impact plate of the head assembly is vertically elongated and presents upper and lower overhangs that assist with vehicle engagement. In addition, the impact plate is provided with flanges on either side to help stiffen the plate. The head is also asymmetrical and streamlined. When the impact head is mounted on a rail member, the central point of impact is off-center with respect to the axis of the head.

No. of claims: 20 No. of figures: 5

Note: Any interested individual may, within 3 months of publication of the grant, file objection thereof with the Grievance Committee after payment of grievance fees.

(19) pATENT OFFICE OF THE COOPERATION COUNCL FOR THE ARAB STATES OF THE GULF

(19) مكتب براءات الاختراع لمجلس التعاون لدول الخليج العربية

[12] Patent

[11] Patent No.: GC0001749 [45] Date of Publishing the Grant of the Patent: 31/03/2012 17/2012	Number of the Decision to Grant the Patent: 11/25756 Date of the Decision to Grant the Patent: 11/07/2011
[21] Application No.: GCC/P/2006/7445 [22] Filing Date: 18/12/2006 [30] Priority: [31] Priority No. [32] Priority date [33] State 11/155.056 17/06/2005 US [72] Inventors: 1- Klaus Joachim Muller-Engel، 2- Thomas D. Wood، 3- Randolph M.Charron [73] Owner: Xtreme Coil Drilling Corp.,1402-500 4th Ave. S.W.Calgary, Alberta , Canada [74] Agent: Ahmed Najdat Bazarbashe	[51] Int. Cl.[7]: E21B 19/22 [56] Cited Documents: - US 2003/0226667A1 (HILL, GILMAN A) 11 December 2003 - US 6273188B1 (SCHLUMBERGER TECHNOLOGY CORP) 14 August 2001 Examiner: Ahmed Saleem Al- Hinai

[54] COILED TUBING TRANSPORT SYSTEM AND METHOD

[57] Abstract: A coiled tubing transfer system comprising a carrier having a bed, the bed having a width and the length, the length of the bed being longer than the width of the bed, a reel removably supported on the bed, the reel comprising a spool rotatably journaled in first and second supports, the spool having a core with a diameter and long axis extending between the supports, the long axis having a length greater than the width of the bed, the reel being positionable on the bed in a first position with the long axis of the core extending lengthwise of the bed, the longest dimension of the reel transverse to the long axis of the core being less than the width of the bed and a length of coiled tubing useable in earth borehole operations being wound around the core, the coiled tubing having an outside diameter of from 1" to 9", the ratio of the diameter of the coiled tubing to the diameter of the core being from 1:20 to 1:70.

No. of claims: 13 No. of figures: 16

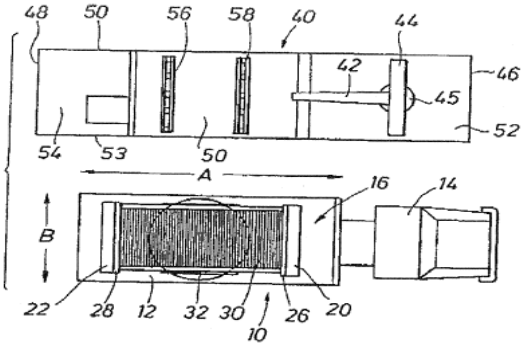

Note: Any interested individual may, within 3 months of publication of the grant, file objection thereof with the Grievance Committee after payment of grievance fees.

(19) pATENT OFFICE OF THE COOPERATION COUNCL FOR THE ARAB STATES OF THE GULF

(19) مكتب براءات الاختراع لمجلس التعاون لدول الخليج العربية

[12] **Patent**

[11] Patent No.: GC0001750 **[45] Date of Publishing the Grant of the Patent: 31/03/2012 17/2012**	**Number of the Decision to Grant the Patent: 11/28540** **Date of the Decision to Grant the Patent: 20/10/2011**
[21] Application No.: GCC/P/2007/8562 **[22] Filing Date: 20/06/2007** **[30] Priority:** **[31] Priority No. [32] Priority date [33] State** **06116003.2 23/06/2006 EP**	**[51] Int. Cl.[7]: C07D 493/04** **[56] Cited Documents:** **- WO 02/083657 A2 (TIBOTEC LTD [IE]; SURLERAUX DOMINIQUE LOUIS NEST [BE]; WIGERINCK) 24 October 2002** **- WO 03/049746 A2 (TIBOTEC PHARM LTD [IE]; VAN DER GEEST RONALD [NL]; STOFFLS PAUL [BE]) 19 June 2003** **- D.L.N.G. SURLERAUX et al.: "Design of HIV-1 Protease Inhibitors Active on Multidrug- Resistant Virus" Journal of Medicinal Chemistry, Vol. 48,No. 6, 2005**
[72] Inventors: 1- Jonckers, Tim Hugo Maria‹ 2- Last, Stefaan Julien‹ 3- Dierynck, Inge ‹4- Boonants, Paul Jozef Gabriel Maria‹ 5- De Kock, Herman Augustinus‹ 6- Baumeister, Judith Eva, 7- Van't Klooster, Gerben Albert Eleutherius **[73] Owner: Tibotec Pharmaceuticals Ltd.,Eastgate Village, Eastgate, Little Island, Co Cork, Ireland** **[74] Agent: Nassir Ali Kadasa**	**Examiner: Nada Moghil Albehaiji**

[54] 2-SUBSTITUTED-AMINO-BENZOTHIAZOLE SULFONAMIDE HIV PROTEASE INHIBITORS

[57] Abstract: The present invention relates to 2-(substituted-amino)-benzothiazole sulfonamide compounds and derivatives, their use as protease inhibitors, in particular as broad- spectrum HIV protease inhibitors, processes for their preparation as well as pharmaceutical compositions and diagnostic kits comprising them. The present invention also concerns combinations of the present 2-(substituted-amino)- benzothiazole sulfonamide compounds and derivatives with another anti-retroviral agent. It further relates to their use in assays as reference compounds or as reagents.

No. of claims: 11 No. of figures: 1

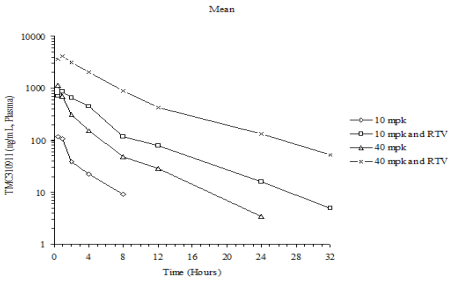

Note: Any interested individual may, within 3 months of publication of the grant, file objection thereof with the Grievance Committee after payment of grievance fees.

(19) pATENT OFFICE OF THE COOPERATION COUNCL FOR THE ARAB STATES OF THE GULF

(19) مكتب براءات الاختراع لمجلس التعاون لدول الخليج العربية

[12] **Patent**

[11] Patent No.: GC0001751 **[45] Date of Publishing the Grant of the Patent: 31/03/2012 17/2012**	**Number of the Decision to Grant the Patent: 11/27778** **Date of the Decision to Grant the Patent: 28/09/2011**
[21] Application No.: GCC/P/2007/8579 **[22] Filing Date: 25/06/2007** **[30] Priority:** **[31] Priority No. [32] Priority date [33] State** **11/474,589 26/6/2006 US** **[72] Inventor: James A. Ringlien** **[73] Owner: Owens - Brockway Glass Container Inc. One Seacate ,Toledo, Ohio 43666,USA** **[74] Agent: Nassir Ali Kadasa**	**[51] Int. Cl.[7]: G01B 11/06** **[56] Cited Documents:** **- FR 2544856 A (OREAL [FR]) 26 October 1984** **- WO 0233349 A (AMERICAN GLASS RES [US]) 25 April 2002** **- EP 1288613 A (OWENS BROCKWAY GLASS CONTAINER [US]) 05 March 2003** **Examiner: Fahad M. al-Baker**

[54] APPARATUS AND METHOD FOR MEASURING SIDEWALL THICKNESS OF NON-ROUND TRANSPARENT CONTAINERS

[57] Abstract: An apparatus for inspecting sidewall thickness of non-round transparent containers includes a conveyor (14) for holding a container (12) in stationary position and rotating the container around an axis (16). A light source (18) directs light energy onto a sidewall of the container on the conveyor. An anamorphic lens system (22) having a lens system axis (46) directs onto a light sensor (18) energy reflected from portions of the inside and outside surfaces of the container sidewall that are substantially parallel to the lens system axis. An information processor (26) is responsive to the sensor for determining sidewall thickness at increments of container rotation as a function of separation at the sensor between light energies reflected from the inside and outside surfaces of the container sidewall.

No. of claims: 3 No. of figures: 6

Note: Any interested individual may, within 3 months of publication of the grant, file objection thereof with the Grievance Committee after payment of grievance fees.

(19) pATENT OFFICE OF THE COOPERATION COUNCL FOR THE ARAB STATES OF THE GULF

(19) مكتب براءات الاختراع لمجلس التعاون لدول الخليج العربية

[12] **Patent**

[11] Patent No.: GC0001752 **[45] Date of Publishing the Grant of the Patent: 31/03/2012 17/2012**	**Number of the Decision to Grant the Patent: 11/27781** **Date of the Decision to Grant the Patent: 28/09/2011**
[21] Application No.: GCC/P/2006/7397 **[22] Filing Date: 13/12/2006** **[30] Priority:** **[31] Priority No. [32] Priority date [33] State** **05027687 16/12/2005 EP** **[72] Inventors: 1- Jan Elsen، 2- Rolf Lonne، 3- Karl Robert** **[73] Owner: Siemens Aktiengesellschaft, , Wittelsbacherplatz 2, D-80333, Munich, Germany** **[74] Agent: Nassir Ali kadasa**	**[51] Int. CI. (2010.01): B08B 9/027, 9/00; G01N 1/22** **[56] Cited Documents:** **- US 4921546 A (BLOCH et al.) 01 May 1990** **Examiner: Fahad M. al-Baker**

[54] METHOD AND DEVICE FOR CLEANING OF COMPONENTS OF A POWER GENERATING PLANT BY MEANS OF BLOWING IN OF A MEDIUM, AND ALSO MEASURING UNIT FOR MEASURING THE DEGREE OF CLEANLINESS OF THE MEDIUM

[57] Abstract: Method and device for cleaning of components of a power generating plant by blowing in of a medium, and also measuring unit for measuring of the degree of cleanliness of the medium The invention relates to a method for cleaning of plant components (2.1.3, 2.2.3, 2.3, 2.4.2, 4.1a, 4.2, 4.3a, 4.3b, 4.4, 4.5a to 4.5c) of a power generating plant (1), wherein a medium is continuously guided in a closed flow circuit (K) through one or more plant components (2.1.3, 2.2.3, 2.3, 2.4.2, 4.1a, 4.2, 4.3a, 4.3b, 4.4, 4.5a to 4.5c) to be cleaned, and a check of the medium for its degree of cleanliness is carried out in at least one operational plant component (4.1a, 4.2, 4.3a, 4.3b, 4.4, 4.5a to 4.5c).

No. of claims: 13 No. of figures: 11

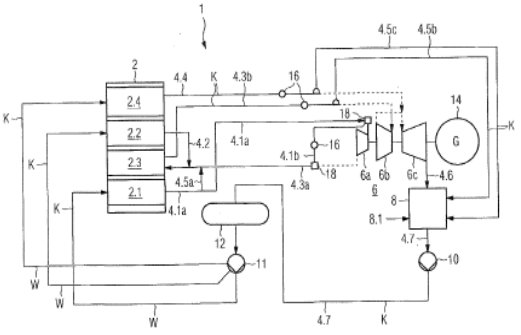

Note: Any interested individual may, within 3 months of publication of the grant, file objection thereof with the Grievance Committee after payment of grievance fees.

(19) pATENT OFFICE OF THE COOPERATION COUNCL FOR THE ARAB STATES OF THE GULF

(19) مكتب براءات الاختراع لمجلس التعاون لدول الخليج العربية

[12] **Patent**

[11] Patent No.: GC0001753 **[45] Date of Publishing the Grant of the Patent: 31/03/2012 17/2012**	**Number of the Decision to Grant the Patent: 11/21872** **Date of the Decision to Grant the Patent: 11/03/2011**
[21] Application No.: GCC/P/2006/6063 **[22] Filing Date: 08/04/2006** **[30] Priority:** **[31] Priority No. [32] Priority date [33] State** **RM2005A000163 07/04/2005 IT** **[72] Inventor: Calderara Ennio** **[73] Owner: Bticino S.p.A., Via Messina, 38- 20154 Milano, Italy** **[74] Agent: Ahmed Najdat Bazarbashe**	**[51]Int. Cl.[7]: H01H 13/14, 13/60, 13/02** **[56] Cited Documents:** **- US 3770925 A (NELSON T, US et al.) 06 November 1973** **- FR 2122513 A (CARR FASTENER CY LTD) 01 September 1972** **- US 4742198 A (MAARTIN el al.) 03 May 1988** **Examiner: Mousa'ab A. AlFadhala**

[54] PUSH- BUTTON SWITCH

[57] Abstract: The present invention relates to a push-button switch comprising: - a box-like supporting structure (2) defining an inner chamber (8), the box- like structure (2) having at least one opening (9) communicating with the inner room (8) and having an opening axis (Z-Z) ; - a push-button (21) to be matched with the supporting structure (2) at said opening (9) ; - mechanical coupling means (22) for coupling the push- button (21) to said structure (2) such that the push- button (21) is allowed to be fastened to the supporting structure (2) while being movable relative thereto in a direction substantially parallel to the opening axis (Z- Z). The push-button switch is characterized in that the mechanical coupling means include a holding and guide frame (22) for the push-button (21), which can be fixed to the supporting structure (2) and can be interposed between the push-button (21) and the structure (2).

No. of claims: 12 No. of figures: 4

Note: Any interested individual may, within 3 months of publication of the grant, file objection thereof with the Grievance Committee after payment of grievance fees.

(19) pATENT OFFICE OF THE COOPERATION COUNCL FOR THE ARAB STATES OF THE GULF

(19) مكتب براءات الاختراع لمجلس التعاون لدول الخليج العربية

[12] Patent

[11] Patent No.: GC0001754 **[45] Date of Publishing the Grant of the Patent: 31/03/2012 17/2012**	**Number of the Decision to Grant the Patent: 11/27766** **Date of the Decision to Grant the Patent: 28/09/2011**
[21] Application No.: GCC/P/2006/6088 **[22] Filing Date: 10/04/2006** **[30] Priority:** **[31] Priority No. [32] Priority date [33] State** **2005110550 11/04/2005 RU** **[72] Inventors: 1- Dmitry Vinogradov ، 2- Alexander Trishkin، 3- Vladimir Vassiliev، 4- Arkadi Fokine** **[73] Owner: Alstom Technology Ltd, Brown Boveri Strasse7 ,5400-CH ,Baden ,Switzerland** **[74] Agent: Saud M. A. Shawwaf**	**[51] Int. Cl.[7]: F01D 5/08, 5/18, 9/06; F02C 7/18** **[56] Cited Documents:** **- EP 1028230 A (ALSTOM POWER AG; ALSTOM (SWITZERLAND) LTD) 16 August 2000** **- EP 0509802 A (GENERAL ELECTRIC COMPANY) 21 October 1992** **- US 5022817 A (O 'HALLORAN et al.) 11 June 1991** **- GB 857750 A (AKTIENGESELLSCHAFT BROWN, BOVERI & CIE) 04 January 1961** **Examiner: Fahad M. al-Baker**

[54] GUIDE VANE CARRIER

[57] Abstract: A gas turbo group has at least one guide vane row (52), the guide vane carrier (51) of which is provided for supplying different blades with different cooling-air mass flows. Consequently, in particular, the inhomogeneous hot-gas temperature distribution in the turbines of gas turbo groups with silo combustion chambers can be taken into account.

No. of claims: 11 No. of figures: 4

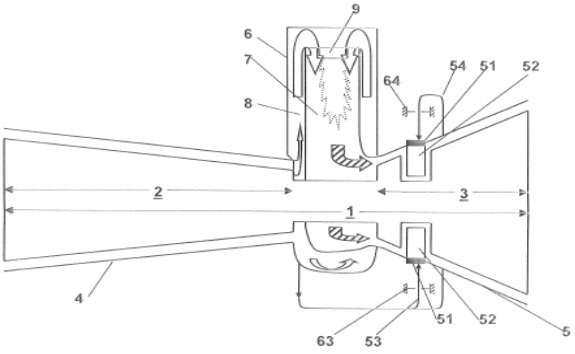

Note: Any interested individual may, within 3 months of publication of the grant, file objection thereof with the Grievance Committee after payment of grievance fees.

(19) pATENT OFFICE OF THE COOPERATION COUNCL FOR THE ARAB STATES OF THE GULF

(19) مكتب براءات الاختراع لمجلس التعاون لدول الخليج العربية

[12] **Patent**

[11] Patent No.: GC0001755 **[45] Date of Publishing the Grant of the Patent: 31/03/2012 17/2012**	**Number of the Decision to Grant the Patent: 11/22717** **Date of the Decision to Grant the Patent: 26/03/2011**
[21] Application No.: GCC/P/2005/5512 **[22] Filing Date: 14/12/2005** **[30] Priority:** **[31] Priority No. [32] Priority date [33] State** **04/13.545 17/12/2004 FR** **05/11.014 26/10/2005 FR** **[72] Inventors: 1- Marion Marie- Claire، 2- Hugues Francois، 3- Diehl Fabrice، 4- Uzio Denis** **[73] Owners: 1- Eni S.P.A, Piazzale E.Mattei, 1 Roma, Italy ، 2- Institut Francais Du PETROLE,1 er 4 avenue de Bois preau, 92852 Rueil, malmaison cedex, France** **[74] Agent: Ahmed najdat bazarbashe**	**[51] Int. Cl.[7]: B01J 21/12, 23/75, C07C 1/04** **[56] Cited Documents:** **- WO 99/42214 A (SASOL TECHNOLOGY LIMITED; SASOL CHEMICALS EUROPE LIMITED; VAN BERGE) 26 August 1999** **- US 3909455 A (RAINER et al.) 30 September 1975** **- WO 02/068117 A (SHOWA DENKO K. K; HOTTA, MASATOSHI; FURUSE, YOSHIO; ATOBE, HITOSHI; CH) 6 September 2002** **- EP 1233011 A (INSTITUT FRANCAIS DU PETROLE; ENI S.P.A; AGIP PETROLI S.P.A) 21 août 2002** **- US 4801620 A (FUJITANI et al.) 31 January 1989** **- US 4497903 A (KIBBY et al.) 05 February 1985** **Examiner: Fahed Zoaid AlMutairi**

[54] COBALT- BASED CATALYST FOR FISCHER- TROPSCH SYNTHESIS

[57] Abstract: The present invention describes a catalyst applicable to the synthesis gas conversion process, said catalyst comprising:

a) a support consisting of a solid solution containing at least a first aluminate element of mixed spinel structure of formula $M_xM'_{(1-x)}Al2O_4/Al2O3.SiO2$, x ranging between and excluding 0 and 1, or of simple spinel structure of formula Mal2O4/Al2O3 SiO2, said support being calcined in an at least partly oxidizing atmosphere, at a temperature ranging between 850°C and 900°C, and

b) an active phase deposited on said support, which contains one or more group VIII metals, selected from among cobalt, nickel, ruthenium or iron. Said catalyst is used in a fixed bed or suspended in a three-phase reactor for hydrocarbon synthesis from a CO, H_2 mixture.

No. of claims: 10

Note: Any interested individual may, within 3 months of publication of the grant, file objection thereof with the Grievance Committee after payment of grievance fees.

(19) pATENT OFFICE OF THE COOPERATION COUNCL FOR THE ARAB STATES OF THE GULF

(19) مكتب براءات الاختراع لمجلس التعاون لدول الخليج العربية

[12] Patent

[11] Patent No.: GC0001756 **[45] Date of Publishing the Grant of the Patent: 31/03/2012 17/2012**	**Number of the Decision to Grant the Patent: 11/21874** **Date of the Decision to Grant the Patent: 11/03/2011**
[21] Application No.: GCC/P/2004/3423 **[22] Filing Date: 01/05/2004** **[30] Priority:** **[31] Priority No. [32] Priority date [33] State** **03021842.4 26/09/2003 DE** **[72] Inventor: Carlo Leoni** **[73] Owner: Saudi Basic Industries Corporation " Sabic", B.O.Box. 5101 Riyadh 11422, Riyadh, KSA** **[74] Agent: Ahmed Najdat Bazarbashe**	**[51] Int. Cl.[7]: B21D 3/00** **[56] Cited Documents:** **- DE 2832445 A (KRAFYWERK UNION AG) 20 March 1980** **Examiner: Mousa'ab A. AlFadhala**

[54] APPARARTUS AND METHOD FOR THE REPAIR OF HEAT EXCHANGERS, ESPECIALLY FOR THE REPAIR OF HEAT EXCHANGER TUBINGS

[57] Abstract: The invention relates to an apparatus the repair of heat exchanger tubing ends of which being embedded in a tube sheet and, if required, are projecting from the outer face of the tube sheet, comprising

a) at least two spaced apart rigid essentially vertical first support means,

b) a second support means, being moveably connected to each of the first vertical support means,

c) at least one mobile boring unit being moveably mounted to the second support means between those position where the second support means is moveably connected to each first support means, and comprising

i) at least one drilling unit being moveably mounted to the boring unit and having a drilling means which is adapted to face the outer face of a tube sheet of a heat exchanger, and

ii) a moving unit for the movement of the boring unit along the second support means.

No. of claims: 7 No. of figures: 11

Note: Any interested individual may, within 3 months of publication of the grant, file objection thereof with the Grievance Committee after payment of grievance fees.

(19) pATENT OFFICE OF THE COOPERATION COUNCL FOR THE ARAB STATES OF THE GULF

(19) مكتب براءات الاختراع لمجلس التعاون لدول الخليج العربية

[12] **Patent**

[11] Patent No.: GC0001757 **[45] Date of Publishing the Grant of the Patent: 31/03/2012 17/2012**	**Number of the Decision to Grant the Patent: 11/27260** **Date of the Decision to Grant the Patent: 14/09/2011**
[21] Application No.: GCC/P/2001/1205 **[22] Filing Date: 11/03/2001** **[30] Priority:** **[31] Priority No. [32] Priority date [33] State** **0012111.1 20/05/2000 GB** **0005665.5 10/03/2000 GB** **[72] Inventors: 1- David O Reilly، 2- Andrew John MANSON، 3- Kevin Gerard Mcadam، 4- Ian Geoffrey Marchmont Anderson** **[73] Owner: British American Tobacco (Investments) Limited, Globe House, 1 Water Street ,WC2R3LA, United Kingdom** **[74] Agent: Suleiman I. Al-Ammar**	**[51] Int. Cl.[7]: A24B 15/24; A24B 15/26** **[56] Cited Documents:** **- US 5810020 A (SALTER ROBERT et al.) 22 September 1998** **- WO 9805226 A (WILLIAMS JONNIE R) 12 February 1998** **- US 4153063 A (ROSELIUS WILHELM et al.) 08 May 1979** **- US 5584989 A (JANESIN DANIEL G) 17 December 1996** **Examiner: Majed I.Al-Rufayyig**

[54] METHOD OF TREATING TOBACCO TO REDUCE OR ELIMINATE NITROSAMINES

[57] Abstract: The invention relates to a method of treating tobacco to reduce or eliminate nitrosamines there from. The method comprises the use of a supercritical fluid extraction medium at elevated temperature and pressure to selectively remove nitrosamines compared with nicotine removal. The nitrosamnine content for all tobacco types can be reduced.

No. of claims: 47

Note: Any interested individual may, within 3 months of publication of the grant, file objection thereof with the Grievance Committee after payment of grievance fees.

(19) pATENT OFFICE OF THE COOPERATION COUNCL FOR THE ARAB STATES OF THE GULF

(19) مكتب براءات الاختراع لمجلس التعاون لدول الخليج العربية

[12] **Patent**

[11] Patent No.: GC0001758 **[45] Date of Publishing the Grant of the Patent: 31/03/2012 17/2012**	**Number of the Decision to Grant the Patent: 11/27256** **Date of the Decision to Grant the Patent: 14/09/2011**
[21] Application No.: GCC/P/2002/2028 **[22] Filing Date: 27/05/2002** **[30] Priority:** **[31] Priority No. [32] Priority date [33] State** **01304714.7 29/05/2001 NL** **[72] Inventors: 1- Joachim Ansorge، 2- Joannes Ignatius Geijsel** **[73] Owner: Shell Internationale Research Maatschsppij B.V., Carel van Bylandtlaan 30, 2596 HR, The Hauge, The Netherlands** **[74] Agent: Suleiman I. Al-Ammar**	**[51] Int. Cl.[7]: C10G 2/00** **[56] Cited Documents:** **- US 2683158 A (BURNSIDE HARVEY E W et al.) 06 July 1954** **Examiner: Majed I.Al-Rufayyig**

[54] METHOD TO START A PROCESS FOR HYDROCARBONS

[57] Abstract: Method to start a steady state process for producing normally gaseous, normally liquid and optionally normally solid hydrocarbons from synthesis gas, which process comprises the steps of : (i) providing the synthesis gas; and (ii) catalytically converting the synthesis gas at an elevated temperature and a steady state total reactor pressure to obtain the normally gaseous, normally liquid and optionally normally solid hydrocarbons; the method comprising admixing the synthesis gas of step (i) with one or more inert gases to form an admixture stream prior to catalytically converting the synthesis gas in step (ii) at the steady state total reactor pressure and wherein as the activity of the catalyst converting the synthesis gas proceeds towards a steady state, the amount of inert gas (es) in the admixture stream is reduced.

No. of claims: 9

Note: Any interested individual may, within 3 months of publication of the grant, file objection thereof with the Grievance Committee after payment of grievance fees.

(19) pATENT OFFICE OF THE COOPERATION COUNCL FOR THE ARAB STATES OF THE GULF

(19) مكتب براءات الاختراع لمجلس التعاون لدول الخليج العربية

[12] **Patent**

[11] Patent No.: GC0001759 **[45] Date of Publishing the Grant of the Patent: 31/03/2012 17/2012**	**Number of the Decision to Grant the Patent: 11/26880** **Date of the Decision to Grant the Patent: 11/09/2011**
[21] Application No.: GCC/P/2002/2087 **[22] Filing Date: 19/06/2002** **[30] Priority:** **[31] Priority No. [32] Priority date [33] State** **60/300,043 21/06/2001 US**	**[51]Int. Cl.[7]: C07C 5/25,11/02** **[56] Cited Documents:** **- US 4697040 A (WILLIAMSON ROGER C et al.) 29 September 1987** **- US 5789646 A (LAMOTTE CHRISTIAN et al.) 04 August 1998** **- EP 0037671 A (MOBIL OIL CORP) 14 October 1981**
[72] Inventors: 1- Michael Joseph Doll، **2- Brendan Dermot Murray** **[73] Owner: Shell Internationale Research Maatschsppij B.V., Carel van Bylandtlaan 30, 2596 HR, The Hauge, The Netherlands** **[74] Agent: Suleiman I. Al-Ammar**	**Examiner: Fahed Zoaid AlMutairi**

[54] A PROCESS FOR THE ISOMERIZATION OF A VINYLIDENE OLEFIN

[57] Abstract: A process for the double bond isomerization of a vinylidene olefin, comprising contacting a feed comprising the vinylidene olefin with an isomerization catalyst which comprises a molecular sieve in an acidic form, which molecular sieve comprises pores which' have a Pore size of more than 0.6 rim; and a process for treating an olefin mixture which comprises a linear a-olefin and a

vinylidene olefin which is isomeric to the linear a- olefin and which is of the general formula $CH_2=C(R^1)R^2$ wherein R^1 represents an ethyl group and R^2 represents a linear 1-alkyl group, which

process comprises isomerizing the vinylidene olefin to form a double bond isomer of the

vinylidene olefin by contacting a feed comprising the olefin mixture with an isomerization catalyst which a molecular sieve in an acidic form, which molecular sieve comprises pores which have a pore size of more than 0.6 rim, and separating the linear a-olefin from the double bond isomer of the vinylidene olefin.

No. of claims: 12

Note: Any interested individual may, within 3 months of publication of the grant, file objection thereof with the Grievance Committee after payment of grievance fees.

(19) pATENT OFFICE OF THE COOPERATION COUNCL FOR THE ARAB STATES OF THE GULF

(19) مكتب براءات الاختراع لمجلس التعاون لدول الخليج العربية

[12] Patent

[11] Patent No.: GC0001760 [45] Date of Publishing the Grant of the Patent: 31/03/2012 17/2012	Number of the Decision to Grant the Patent: 11/27252 Date of the Decision to Grant the Patent: 14/09/2011
[21] Application No.: GCC/P/2003/2568 [22] Filing Date: 25/03/2003 [30] Priority: [31] Priority No. [32] Priority date [33] State 02252120,7 25/03/200 EP [72] Inventor: Eric Johannes PUIK [73] Owner: Shell Internationale Research Maatschsppij B.V., Carel van Bylandtlaan 30, 2596 HR, The Hauge, The Netherlands 74] Agent: Suleiman I. Al-Ammar	[51] Int. Cl.[7]: B01D 17/032, 17/12 [56] Cited Documents: - EP 1044711 A (SHELL INTERNATIONAL RESEARCH MATSHAPPIJ) 18 October 2000 - DARABASE WPI Week 199745 Derwent Publications Ltd., London, GB; AN 97-488029 XP002116078 & RU 2077364 C (KHAZIEV) 20 April 1997 Examiner: Majed I.Al-Rufayyig

[54] METHOD AND DEVICE FOR SEPARATING A MIXTURE OF FLUIDS

[57] Abstract: A mixture of fluids is separated into at least two phases, one of which has a higher density than the other, passing the mixture through a normally horizontal supply pipe, by creating a stratified flow in the supply pipe, by passing the mixture through an inclined pipe, whilst maintaining a stratified flow in the inclined pipe, by extracting fluid with lower density ("lighter phase") via a first discharge system and fluid with a higher density ("heavier phase") via a second discharge system, wherein the interface between the lighter phase and the heavier phase is monitored in the inclined pipe by a level controller means that varies the flow of the fluid of higher density to keep the interface between set levels. The invention also provides a device for employing this method.

No. of claims: 25

Note: Any interested individual may, within 3 months of publication of the grant, file objection thereof with the Grievance Committee after payment of grievance fees.

(19) pATENT OFFICE OF THE COOPERATION COUNCL FOR THE ARAB STATES OF THE GULF

(19) مكتب براءات الاختراع لمجلس التعاون لدول الخليج العربية

[12] **Patent**

[11] Patent No.: GC0001761 **[45] Date of Publishing the Grant of the Patent: 31/03/2012 17/2012**	**Number of the Decision to Grant the Patent: 11/26874** **Date of the Decision to Grant the Patent: 11/09/2011**
[21] Application No.: GCC/P/2003/2635 **[22] Filing Date: 03/05/2003** **[30] Priority:** **[31] Priority No. [32] Priority date [33] State** **0210143.4 02/05/2002 GB** **[72] Inventors: 1- Melvyn Kilner، 2- Simon Peter Carbtree، 3- Derek Vincent Tyers، 4- Michael Anthony Wood** **[73] Owner: Davy Process Technology Ltd., 20 Eastbourne Terrace, 2W 6LE, London, United Kingdom** **[74] Agent: Suleiman I. Al-Ammar**	**[51] Int. Cl.[7]: C07C 27/04, 29/149; B01J 31/40** **[56] Cited Documents:** **- US 5047561 A (ISOGAI SHINJI et al.) 10 September 1991** **- US 5689003 A (PACIELLO ROCCO ANGELO et al.) 18 November 1997** **Examiner: Fahed Zoaid AlMutairi**

[54] HOMOGENEOUS PROCESS FOR THE HYDROGENATION OF CARBOXYLIC ACIDS AND/OR DERIVATIVES THEREOF

[57] Abstract: A homogenous process for the hydrogenation of the carboxylic and/or derivatives thereof in the presence of a catalyst comprising ruthenium, rhodium, iron, osmium or palladium, and an organic phosphine is described in which the hydrogenation is carried out in the presence of at least about 1% by weight water. A process for regenerating a catalyst comprising ruthenium, rhodium, iron, osmium, or palladium and an organic phosphine is also described in which the regeneration is carried out in the presence of hydrogen and water.

No. of claims: 16

Note: Any interested individual may, within 3 months of publication of the grant, file objection thereof with the Grievance Committee after payment of grievance fees.

(19) pATENT OFFICE OF THE COOPERATION COUNCL FOR THE ARAB STATES OF THE GULF

(19) مكتب براءات الاختراع لمجلس التعاون لدول الخليج العربية

[12] **Patent**

[11] Patent No.: GC0001762 **[45] Date of Publishing the Grant of the Patent: 31/03/2012 17/2012**	**Number of the Decision to Grant the Patent: 11/27262** **Date of the Decision to Grant the Patent: 14/09/2011**
[21] Application No.: GCC/P/2003/2888 **[22] Filing Date: 09/09/2003** **[30] Priority:** **[31] Priority No. [32] Priority date [33] State** **1-0201593 28/05/2002 SE** **[72] Inventor: Allan Dickner** **[73] Owner: Inter Ikea Systems B.V., Olof Palmestraat 1, Nl-2616, Ln Delft, The Netherlands** **[74] Agent: Suleiman I. Al-Ammar**	**[51] Int. Cl.[7]: B65D 71/04; B65B 35/54** **[56] Cited Documents:** **- US 5701722 A (FRANKLIN et al.) 30 December 1997** **- US 5899046 A (HUGHES) 04 May 1999** **- WO 00/17080 A1 (NEAGLE et al.) 30 March 2000** **- US 3329262 A (H.T. MARTIN et al.) 04 July 1967** **- DE 3347474 A1 (HULO PANNERDEN B.V.) 21 February 1985** **- DE 3604208 A1 (EMPEE GOLFKARTON B.V.) 11 September 1986** **Examiner: Majed I.Al-Rufayyig**

[54] A SYSTEM AND METHOD FOR CREATION OF LOAD UNITS

[57] Abstract: The present invention concerns a system and a method for load unit (4) creation. The system includes two or more stations (8-10), in which the load units (4) are formed. In a first station (8), one or more packages (1) are collected and placed to form the load unit (4). In later stations loading ledges (2) are added to the load units (4), and straps (7) and/or stretch wrapping is wound around the load units (4).

No. of claims: 7 No. of figures: 3

Note: Any interested individual may, within 3 months of publication of the grant, file objection thereof with the Grievance Committee after payment of grievance fees.

(19) pATENT OFFICE OF THE COOPERATION COUNCL FOR THE ARAB STATES OF THE GULF

(19) مكتب براءات الاختراع لمجلس التعاون لدول الخليج العربية

[12] **Patent**

[11] Patent No.: GC0001763 **[45] Date of Publishing the Grant of the Patent: 31/03/2012 17/2012**	**Number of the Decision to Grant the Patent: 11/26876** **Date of the Decision to Grant the Patent: 11/09/2011**
[21] Application No.: GCC/P/2003/2894 **[22] Filing Date: 10/09/2003** **[30] Priority:** **[31] Priority No. [32] Priority date [33] State** **0309812,6 30/04/2003 GB** **0221093,8 01/09/2002 GB** **0316159,3 04/07/2003 GB** **0228018,8 30/11/2002 GB** **GB2003/003419 06/08/2003 PCT** **[72] Inventors: 1- Ian R. Butler، 2- EASTHAM, Graham** **[73] Owner: Lucite International UK Limited, Queens Gate, 17-15 Queens Terrace, 14SO BP3, Southampton, Hampshire, United Kingodm** **[74] Agent: Suleiman I. Al-Ammar**	**[51] Int. Cl.[7]: B01J 31/24, 67/38** **[56] Cited Documents:** **- WO 96/19434 A (EASTHAM GRAHAM RONALD; TOOZE ROBERT PAUL (GB); ICI PLC (GB); WANG XIA) 27 June 1996** **- EP 0662467 A (DSM NV; DU PONT (US)) 12 July 1995** **Examiner: Fahed Zoaid AlMutairi**

[54] CATALYTIC TRIMERIZATION AND TETRAMERIZATION OF OLEFINIC MONOMERS

[57] Abstract: A catalyst suitable for carbonylating ethylenically unsaturated compounds comprising a Group VIIIB metal or compound thereof a metallocene

No. of claims: 44

Note: Any interested individual may, within 3 months of publication of the grant, file objection thereof with the Grievance Committee after payment of grievance fees.

(19) pATENT OFFICE OF THE COOPERATION COUNCL FOR THE ARAB STATES OF THE GULF

(19) مكتب براءات الاختراع لمجلس التعاون لدول الخليج العربية

[12] **Patent**

[11] Patent No.: GC0001764 **[45] Date of Publishing the Grant of the Patent: 31/03/2012 17/2012**	**Number of the Decision to Grant the Patent: 11/26878** **Date of the Decision to Grant the Patent: 11/09/2011**
[21] Application No.: GCC/P/2003/2930 **[22] Filing Date: 24/09/2003** **[30] Priority:** **[31] Priority No. [32] Priority date [33] State** **PCT/CH02/00535 25/09/2002 PCT** **[72] Inventors: 1- Al-Alim M. Ibrahim، 2- Belkhiria Sahbi** **[73] Owner: Polykem Sarl, Pse-B, Ecublens, CH-1015 , Lausanne, Switzerland** **[74] Agent: Suleiman I. Al-Ammar**	**[51]Int. Cl.[7]: B01J 20/22, 20/24, 20/26, 20/30** **[56] Cited Documents:** **- US 4051086 A (REID ALBERT RICHARD) 27 September 1977** **- DATABASE WPI Section Ch, Week 198625 Derwent Publications Ltd., London, GB; Class All, AN 1986-160317 XP002269147 & JP 61 094655 A (MIYATA N) 13 May 1986** **- PATENT ABSTRACT OF JAPAN Vol. 1996, No. 09 30 September 1996 A (NIPPON SYTHETIC CHEM IND CO LTD; THE) 14 May 1996** **- EP 0072213 A (UNILEVER NV) 16 February 1983** **Examiner: Fahed Zoaid AlMutairi**

[54] LIQUID-ABSORBING POLYMER, A PROCESS AND A VESSEL FOR ITS PRODUCTION

[57] Abstract: The invention relates to a superabsorbent polymer based on a cross-linked acrylic polymer derivatives, in which the content of acrylic polymer containing a N atom, such as acrylamide or acrylonitrile, represents between 5 % and 95 % by weight, said superabsorbent comprising at least a hydrocolloidal polysaccharide in a amount not exceeding 5 parts by weight for 100 parts of acrylic unites.

No. of claims: 8 No. of figures: 1

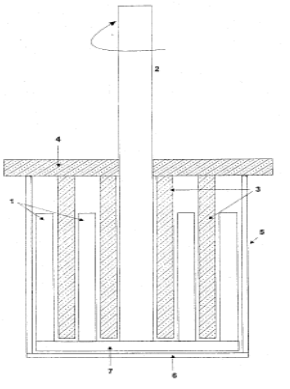

Note: Any interested individual may, within 3 months of publication of the grant, file objection thereof with the Grievance Committee after payment of grievance fees.

(19) pATENT OFFICE OF THE COOPERATION COUNCL FOR THE ARAB STATES OF THE GULF

(19) مكتب براءات الاختراع لمجلس التعاون لدول الخليج العربية

[12] **Patent**

[11] Patent No.: GC0001765 **[45] Date of Publishing the Grant of the Patent: 31/03/2012 17/2012**	**Number of the Decision to Grant the Patent: 11/26848** **Date of the Decision to Grant the Patent: 11/09/2011**
[21] Application No.: GCC/P/2004/3334 **[22] Filing Date: 27/03/2004** **[30] Priority:** **[31] Priority No. [32] Priority date [33] State** **03251907.6 26/03/2003 EP** **[72] Inventors: 1- Marcel Vos، 2- Michel GILLARD، 3- Mark Plehiers** **[73] Owner: SigmaKalon Services B.V.** **[74] Agent: Suleiman I. Al-Ammar**	**[51] Int. Cl.[7]: C09D 183/00; C08G 77/42** **[56] Cited Documents:** **- US 2002/156224 A1 (TSUBOI MAKOTO et al.) 24 October 2002** **- EP 1260513 A (SIGMA COATINGS BV) 27 November 2002** **Examiner: Mohammad Al-Ismael**

[54] PROCESS FOR THE PREPARATION OF POLY SILYL ESTER S, AND THEIR USES

[57] Abstract: The present invention provides a process for the preparation of poly(silyl ester)s comprising a structural unit of the formula.

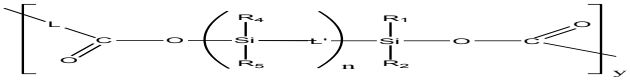

(I)

which process comprises the step of reacting;
a polyacid of formula(II)

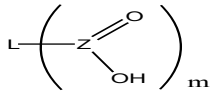

(II)

with a polyacyloxysilyl derivative of formula(III)



(III)

whilst removing the formed acid group(s) of formula (IV) and (V) and (VI),

R7Z (O)OH (IV),
R9Z(O)OH (V),
R8Z(O)OH (VI),
from the system

No. of claims: 45

Note: Any interested individual may, within 3 months of publication of the grant, file objection thereof with the Grievance Committee after payment of grievance fees.

(19) pATENT OFFICE OF THE COOPERATION COUNCL FOR THE ARAB STATES OF THE GULF

(19) مكتب براءات الاختراع لمجلس التعاون لدول الخليج العربية

[12] Patent

[11] Patent No.: GC0001766 **[45] Date of Publishing the Grant of the Patent: 31/03/2012 17/2012**	**Number of the Decision to Grant the Patent: 11/27875** **Date of the Decision to Grant the Patent: 28/09/2011**
[21] Application No.: GCC/P/2004/3833 **[22] Filing Date: 22/09/2004** **[30] Priority:** **[31] Priority No. [32] Priority date [33] State** **60/506,312 26/09/2003 US** **[72] Inventors: 1- David Stephen Brown ،** **2- Michael Joseph Doll** **[73] Owner: Shell Internationale Research Maatschsppij B.V., Carel van Bylandtlaan 30, 2596 HR, The Hauge, The Netherlands** **[74] Agent: Suleiman I. Al-Ammar**	**[51] Int. CI.[7]: C07C 5/25,11/02** **[56] Cited Documents:** **- US 4514229 A (NIPPON PETROCHEMICALS COMPANY, LINITED, JAPAN) 30 April 1985** **- US 4749819 A (SHELL OIL COMPANY, HOUSTON, TEX.) 07 June 1988** **Examiner: Abdulaziz S. AL-Motek**

[54] PROCESS FOR ISOMERIZATION OF ALPHA OLEFINS AND COMPOSITIONS RESULTING THEREFROM

[57] Abstract: A process for the conversion of 016 and/or C18 alpha olefins to internal olefins encompasses passing the C16 and/or C18 alpha olefins through a bed of solid acid silica-alumina catalyst at a maintained operating temperature of between 70° to 140° C. The amount of residual alpha olefin content in the isomerized internal olefin mixture is less than 10 weight percent. The isomerized internal olefin mixture further preferably contains less than 25 weight percent of the C_1 and C6-C8 isomers and, optionally, the C9 isomer when a 018 is being converted, the remainder being the C_2-0_5 olefinic isomers. Such isomerized internal olefin mixtures have particular applicability as paper sizing compositions and as drilling fluids.

No. of claims: 9

Note: Any interested individual may, within 3 months of publication of the grant, file objection thereof with the Grievance Committee after payment of grievance fees.

(19) pATENT OFFICE OF THE
COOPERATION COUNCL FOR
THE ARAB STATES OF THE GULF

(19) مكتب براءات الاختراع
لمجلس التعاون لدول الخليج العربية

[12] Patent

[11] Patent No.: GC0001767 **[45] Date of Publishing the Grant of the Patent: 31/03/2012 17/2012**	**Number of the Decision to Grant the Patent: 11/28196** **Date of the Decision to Grant the Patent: 06/10/2011**
[21] Application No.: GCC/P/2005/4913 **[22] Filing Date: 17/07/2005** **[30] Priority:** **[31] Priority No. [32] Priority date [33] State** **20043075 20/07/2004 NO** **[72] Inventor: Tor Soyland Hansen** **[73] Owner: Elkem As, Hoffsveien B65, 0377, Oslo, Norway** **[74] Agent: Suleiman I. Al-Ammar**	**[51] Int. Cl.[7]: C04B 14/30** **[56] Cited Documents:** **- US5215583 A (BAYER AG) 01 June 1993** **Examiner: Yahiya Naser Al-BuSafi**

[54] GRANULES OF POWDERY MINERALS AND METHOD FOR PRODUCTION OF GRANULES

[57] Abstract: The present application relates to granules of powdery mineral particles produced by spray granulation of a liquid slurry comprising powdery mineral particles having particle size below 10 um, at least one water-reducing agent. The application further relates to a method for producing such granules.

No. of claims:9

Note: Any interested individual may, within 3 months of publication of the grant, file objection thereof with the Grievance Committee after payment of grievance fees.

(19) pATENT OFFICE OF THE COOPERATION COUNCL FOR THE ARAB STATES OF THE GULF

(19) مكتب براءات الاختراع لمجلس التعاون لدول الخليج العربية

[12] **Patent**

[11] Patent No.: GC0001768 **[45] Date of Publishing the Grant of the Patent: 31/03/2012 17/2012**	**Number of the Decision to Grant the Patent: 11/28194** **Date of the Decision to Grant the Patent: 06/10/2011**
[21] Application No.: GCC/P/2005/5069 **[22] Filing Date: 24/08/2005** **[30] Priority:** **[31] Priority No. [32] Priority date [33] State** **0418934.6 25/08/2004 GB** **[72] Inventors: 1- Cornelis Martinus Lok،** **2- John West** **[73] Owner: Johnson Matthey PLC, 2-4 Cockspur Street, Trafalgar Square, London SW1Y 5BQ, United Kingodm** **[74] Agent: Suleiman I. Al-Ammar**	**[51] Int. Cl.[7]: B01J 23/75, 37/03, 35/10; C10G 2/00** **[56] Cited Documents:** **- WO 0187480 A1 (IMPERIAL CHEMICAL INDUSTRIES PLC) 22 November 2001** **- EP 0496448 A1 (UNICHEMA CHEMIE BV) 29 July 1992** **Examiner: Yahiya Naser Al-BuSafi**

[54] A PARTICULATE CATALYST COMPRISING AN INTIMATE MIXTURE OF COBALT AND ALUMINIUM COMPOUNDS

[57] Abstract: A particulate catalyst is described comprising an intimate mixture of cobalt aluminium compounds having cobalt and aluminium at an atomic ratio in the range 10:1 to 2:1 (Co:Al), which ehen reduced at 425° C, has a cobalt surface area as measured by hydrogen chemisorptions at 150°C of at least 30 m^2/g of catalyst. The catalyst is prepared by sequential precipitation of cobalt with aluminium ions in the presence of an alkaline precipitation agent. The catalyst may be used for the hydrogenation of unsaturated compounds or the Fischer-Tropsch synthesis of hydrocarbons.

No. of claims: 14

Note: Any interested individual may, within 3 months of publication of the grant, file objection thereof with the Grievance Committee after payment of grievance fees.

(19) pATENT OFFICE OF THE COOPERATION COUNCL FOR THE ARAB STATES OF THE GULF

(19) مكتب براءات الاختراع لمجلس التعاون لدول الخليج العربية

[12] **Patent**

[11] Patent No.: GC0001769 **[45] Date of Publishing the Grant of the Patent: 31/03/2012 17/2012**	**Number of the Decision to Grant the Patent: 11/26862** **Date of the Decision to Grant the Patent: 11/09/2011**
[21] Application No.: GCC/P/2005/5171 **[22] Filing Date: 17/09/2005** **[30] Priority:** **[31] Priority No. [32] Priority date [33] State** **10/943,756 17/09/2005 US** **[72] Inventor: Opinder Kishan Bhan** **[73] Owner: Shell Internationale Research Maatschsppij B.V., Carel van Bylandtlaan 30, 2596 HR, The Hauge, The Netherlands** **[74] Agent: Suleiman I. Al-Ammar**	**[51] Int. Cl.[7]: B01J 21/04, 23/85, 23/75, 27/18; C10G 45/04** **[56] Cited Documents:** **- US 4145316 A (ROBSON et al.) 20 March 1979** **- EP 0300629 A (SUMITOMO METAL MINING COMPANY LIMITED) 25 January 1989** **- EP 0972748 A (JAPAN ENERGY CORPORATION) 19 January 2000** **- EP 0601722 (SUMITOMO METAL MINING COMPANY LIMITED) 15 June 1994** **- EP 0357295 A (SUMITOMO METAL MINING COMPANY LIMITED) 07 March 1990** **Examiner: Fahed Zoaid AlMutairi**

[54] A HIGH ACTIVITY HYDRODESULFURIZATION CATALYST, A METHOD OF MAKING A HIGH ACTIVITY HYDRODESULFURIZATION CATALYST, AND A PROCESS FOR MANUFACTURING AN ULTRA-LOW SULFUR DISTILLATE PRODUCT

[57] Abstract: A method of making high activity catalyst composition suitable for use in the hydrodesulfurization of a middle distillate feed, such as diesel fuel, having a high concentration of sulfur, to thereby provides a low sulfur middle distillate product. The method comprises heat treating aluminum hydroxide under controlled temperature conditions thereby converting said aluminum hydroxide to gamma-alumina to give a converted aluminum hydroxide, and controlling the fraction of said converted aluminum hydroxide that is a gamma-alumina by controlling said controlled temperature conditions to within a calcinations temperature range of from 850 ˚F (454 ˚C) to 950 ˚C (510 ˚C) so that essentially all of said aluminum hydroxide is converted to a transition alumina but less than a material amount of the converted aluminum hydroxide is converted to a transition alumina other than gamma-alumina. A catalytic component is incorporated into said converted aluminum hydroxide to provide an intermediate, which is heat treated to provide said high activity catalyst composition.

No. of claims: 12 No. of figures: 5

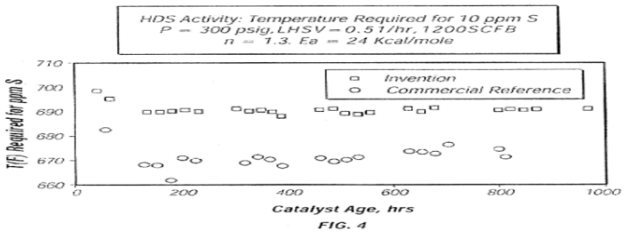

FIG. 4

Note: Any interested individual may, within 3 months of publication of the grant, file objection thereof with the Grievance Committee after payment of grievance fees.

(19) pATENT OFFICE OF THE COOPERATION COUNCL FOR THE ARAB STATES OF THE GULF

(19) مكتب براءات الاختراع لمجلس التعاون لدول الخليج العربية

[12] **Patent**

[11] Patent No.: GC0001770 **[45] Date of Publishing the Grant of the Patent:**	**Number of the Decision to Grant the Patent: 11/28204** **Date of the Decision to Grant the Patent: 06/10/2011**
[21] Application No.: GCC/P/2006/5778 **[22] Filing Date: 07/02/2006** **[30] Priority:** **[31] Priority No. [32] Priority date [33] State** **0501249 08/02/2005 FR** **[72] Inventors: 1- Mr. Michel Lempereur،** **2- Mr. Michel Strebelle** **[73] Owner: Solvay, 33 Rue Du Prince Albert, 1050 Brussels, Belgium** **[74] Agent: Suleiman I. Al-Ammar**	**[51]Int. Cl.[7]: C01B 7/07; B01D 53/14; C07C 17/093** **[56] Cited Documents:** **- US 3618295 A (FRIEDHELM GEIGER et al.) 09 November 1971** **- GB 1272037 A (SOCIETA ITALIANA RESINE S.P.A) 26 April 1972** **Examiner: Yahiya Naser Al-BuSafi**

[54] METHOD FOR PURIFYING HYDROGEN CHLORIDE

[57] Abstract: Method for purifying hydrogen chloride gas containing aromatic organic compounds, comprising at least one step of contacting the said hydrogen chloride with a scrubbing agent containing 1,2-dichlorethane

No. of claims: 11 No. of figures: 1

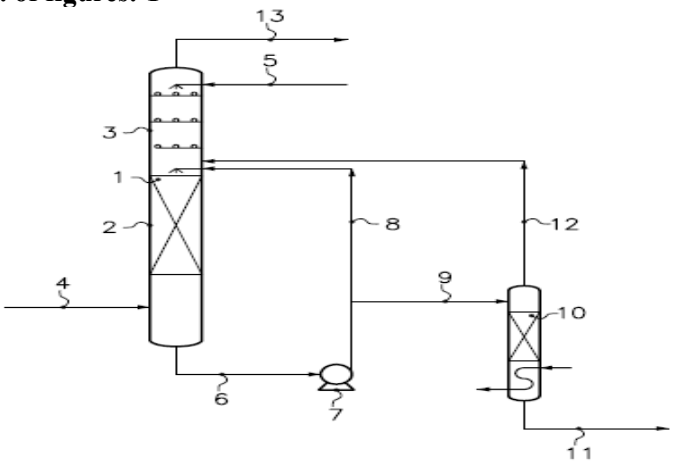

Note: Any interested individual may, within 3 months of publication of the grant, file objection thereof with the Grievance Committee after payment of grievance fees.

(19) pATENT OFFICE OF THE COOPERATION COUNCL FOR THE ARAB STATES OF THE GULF

(19) مكتب براءات الاختراع لمجلس التعاون لدول الخليج العربية

[12] Patent

[11] Patent No.: GC0001771 **[45] Date of Publishing the Grant of the Patent: 31/03/2012 17/2012**	**Number of the Decision to Grant the Patent: 11/26843** **Date of the Decision to Grant the Patent: 11/09/2011**
[21] Application No.: GCC/P/2006/6061 **[22] Filing Date: 08/04/2006** **[30] Priority:** **[31] Priority No. [32] Priority date [33] State** **05252220.8 08/04/2005 EP** **[72] Inventors: 1- Johan Paul Smit، 2 - Quoc An On، 3- Eric Johannes Maria De Boer، 4- Harry Van Der Heijden، 5- Arie Van Zon** **[73] Owner: Shell Internationale Research Maatschappij B. V., Carel van Bylandtlaan 30, 2596 HR, The Hague the Netherlands** **[74] Agent: Suleiman I. Al-Ammar**	**B01J 31/24, 31/18** **[56] Cited Documents:** **- US 2003/166456 A1 (WASS DUNCAN FRANK) 04 September 2003** **- WO 2004/056478 A (SASOL TECHNOLOGY LIMITED; BLANN, KEVIN; BOLLMANN, ANNETTE; DIXON, JOH) 08 July 2004** **- WO 2004/056480 A (SASOL TECHNOLOGY LIMITED; BLANN, KEVIN; DIXON, JOHN THOMAS; DE WET-R) 08 July 2004** **- WO 2005/123633 A (SASOL TECHNOLOGY LIMTIED; DIXON, JOHN THOMAS; MORGAN DAVID HEDLEY; K) 29 December** **Examiner: Fahed Zoaid AlMutairi**

[54] CATALYTIC TRIMERIZATION AND TETRAMERIZATION OF OLEFINIC MONOMERS

[57] Abstract: catalyst precursor composition comprising: a) a source of chromium, molybdenum or tungsten; b) a first ligand having the general formula (I) ; $(R^1)(R^2)$ P-X-P$(R^3)(R^4)$ (I), wherein: X is a bivalent organic bridging group; R^1 and R^3 are independently selected from, hydrocarbyl, substituted hydrocarbyl, heterohydrocarbyl and substituted heterohydrocarbyl groups, with the proviso that when R^1 and R^3 are aromatic groups they do not contain a polar substituent at any of the ortho-positions; R^2 and R^4 are independently selected from optionally substituted aromatic groups, each R^2 and R^4 bearing a polar substituent on at least one of the ortho-positions; and c) a second ligand having the general formula (II) ; $(R^{1'})(R^{2'})$P-X'-P$(R^{3'})(R^{4'})$ (II), wherein: X' is a bridging group of the formula -N$(R^{5'})$-, wherein $R^{5'}$ is selected from hydrogen, a hydrocarbyl group, a substituted hydrocarbyl group, a heterohydrocarbyl group, a substituted heterohydrocarbyl group, a silyl group or derivative thereof; and $R^{1'}$, $R^{2'}$, $R^{3'}$ and $R^{4'}$ are independently selected from hydrocarbyl, substituted hydrocarbyl, heterohydrocarbyl and substituted heterohydrocarbyl groups of which at least one of $R^{1'}$, $R^{2'}$, $R^{3'}$ and $R^{4'}$ is substituted with a polar substituent, or $R^{1'}$, $R^{2'}$, $R^{3'}$ and $R^{4'}$ are independently selected from hydrocarbyl, substituted hydrocarbyl, heterohydrocarbyl and substituted heterohydrocarbyl groups, wherein any substituents on one or more of $R^{1'}$, $R^{2'}$, $R^{3'}$ and $R^{4'}$ are non-polar. The present invention also relates to a catalyst system comprising the catalyst precursor composition of the present invention and additional component; d) a cocatalyst. The present invention further relates to a process for the trimerization and tetramerization of olefinic monomers, particularly the trimerization and tetramerization of ethylene to 1-hexene and 1-octene, wherein the process comprises contacting at least one olefinic monomer with the catalyst system of the present invention.

No. of claims: 14

Note: Any interested individual may, within 3 months of publication of the grant, file objection thereof with the Grievance Committee after payment of grievance fees.

(19) pATENT OFFICE OF THE COOPERATION COUNCL FOR THE ARAB STATES OF THE GULF

(19) مكتب براءات الاختراع لمجلس التعاون لدول الخليج العربية

[12] **Patent**

[11] Patent No.: GC0001772 **[45] Date of Publishing the Grant of the Patent: 31/03/2012 17/2012**	**Number of the Decision to Grant the Patent: 11/26811** **Date of the Decision to Grant the Patent: 11/09/2011**
[21] Application No.: GCC/P/2006/6221 **[22] Filing Date: 06/05/2006** **[30] Priority:** **[31] Priority No. [32] Priority date [33] State** **102005021221.2 07/05/2005 DE** **[72] Inventors: 1- Wulf Bentlage، 2- Reinmar Peppmoller، 3- Jurgen Kunstmann، 4- Oliver Zindel** **[73] Owner: Geohumus International GmbH & Co. KG,Vilbeler Landstrasse , 17-19,60386, Frankfurt am Main, Germany** **[74] Agent: Suleiman I. Al-Ammar**	**[51] Int. Cl.[7]: C08K 9/00, 9/04, 13/00, 13/02; C09K 17/40** **[56] Cited Documents:** **- US 2004/132869 A1 (PEPPMOLLER REINMAR ET AL) 08 July 2004** **- EP 0942014 A (NIPPON SHOKUBAI CO LTD) 15 September 1999** **- DE 10114169 A1 (PEPPMOELLER, REINMAR; FABRITZ, GERHARD) 02 October** **- US 4735987 A (MORITA et al.) 05 April 1988** **Examiner: Bander M. Al-Thobity**

[54] WATER-SWELLABLE HYBRID MATERIAL WITH INORGANIC ADDITIVES AND METHOD OF PRODUCING SAME

[57] Abstract: The present invention relates to a water-swellable hybrid material comprising a structurally crosslinked polymer matrix and inorganic particulate solids bound therein, having a time-dependent swelling behaviour corresponding to an uptake of water of at least 7.5 times the hybrid material's own weight within one hour, and also to its uses. The present invention further relates to a process for preparing this water -swellable hybrid material.

No. of claims: 25 No. of figures: 4

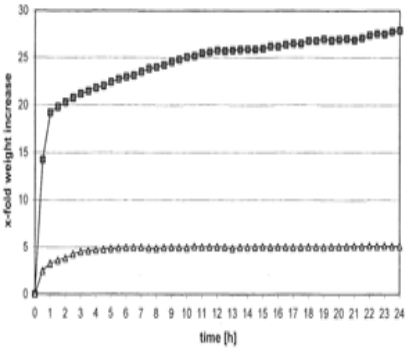

Note: Any interested individual may, within 3 months of publication of the grant, file objection thereof with the Grievance Committee after payment of grievance fees.

[12] Patent

[11] Patent No.: GC0001773 **[45] Date of Publishing the Grant of the Patent: 31/03/2012 17/2012**	**Number of the Decision to Grant the Patent: 11/27873** **Date of the Decision to Grant the Patent: 28/09/2011**
[21] Application No.: GCC/P/2006/6724 **[22] Filing Date: 05/08/2006** **[30] Priority:** **[31] Priority No. [32] Priority date [33] State** **0501782-7 05/08/2005 SE** **[72] Inventor: Bo Widen** **[73] Owner: Winloc AG, P.O. Box 4233,Baarerstrasse 43, CH-6304 ZUG, Switzerland** **[74] Agent: Suleiman I. Al-Ammar**	**[51] Int. Cl.[7]: E05B 27/02, 15/12** **[56] Cited Documents:** **- US 20050061043 A1 (B. WIDEN) 24 March 2005** **- US 4325241 A (E. KELLER) 20 April 1982** **- DE 4419999 A1 (KNAUER, H.) 14 December 1995** **Examiner: Fahad M. al-Baker**

[54] A LOCK AND KEY SYSTEM WITH IMPROVED TUMBLERS IN THE LOCK

[57] Abstract: A lock and key system is disclosed including locks of the kind comprising a cylindrical key plug (203) with locking tumblers (205) having a body part (206a) and an integral key sensing 5 part (206b) for engagement with an associated key (100). The key sensing part (206b) of each locking tumbler comprises at least two neighboring key contacting portions (2lOa, 211a) being mutually displaced from each other longitudinally along the key plug axis and being confined within e limited region, for possible sliding engagement with a longitudinal code, pattexn of the associated key, at least one but not necessarily all of these key contacting portions of each locking tumbler actually engaging with a corresponding code portion of the associated key upon fully inserting the latter into the key slot of the lock.

No. of claims: 36 No. of figures: 30

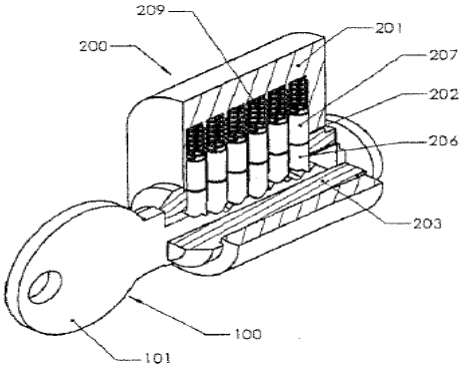

Note: Any interested individual may, within 3 months of publication of the grant, file objection thereof with the Grievance Committee after payment of grievance fees.

(19) pATENT OFFICE OF THE COOPERATION COUNCL FOR THE ARAB STATES OF THE GULF

(19) مكتب براءات الاختراع لمجلس التعاون لدول الخليج العربية

[12] **Patent**

[11] Patent No.: GC0001774 **[45] Date of Publishing the Grant of the Patent: 31/03/2012 17/2012**	**Number of the Decision to Grant the Patent: 11/27886** **Date of the Decision to Grant the Patent: 28/09/2011**
[21] Application No.: GCC/P/2006/6877 **[22] Filing Date: 10/09/2006** **[30] Priority:** **[31] Priority No. [32] Priority date [33] State** **0509268 12/09/2005 FR** **[72] Inventor: Dutilleul Pierre** **[73] Owner: Vallourec Mannesmann Oil & Gaz France,54, rue Anatole France,59620-F , AYMERIES-AULNOYE, France** **[74] Agent: Suleiman I. Al-Ammar**	**[51] Int. Cl.[7]: G01M 3/02** **[56] Cited Documents:** **- US 4407171A (HASHA et al.) 04 October 1983** **- US 5505502 A (SMITH et al.) 09 April 1996** **- US 4643467 A (WOOD et al.) 17 February 1987** **Examiner: Fahad M. al-Baker**

[54] METHOD FOR PRESSURE TESTING A THREADED COMPONENT

[57] Abstract: A cap (10) comprising a female threading (1 1) matched with that (2) of a first element is made up onto the first male threaded element (1) of a component to be tested so as to compress a sealing ring (16) between metal surfaces (7, l5) of the first element and the cap, and a test pressure is established inside said component, the male element (1) having an annular lip (3) which is capable of deforming radially outwardly under the effect of said test pressure.

Between the radially outward surface (6) of the lip (3) and the facing surface (19) of the cap, at the end of makeup there exists a clearance having a value (j) which has been selected sufficiently small so that, under the effect of the test pressure , the lip bears on said facing surface without undergoing plastic deformation.

Application to tubular string accessories for hydrocarbon Wells.

No. of claims: 18 No. of figures: 7

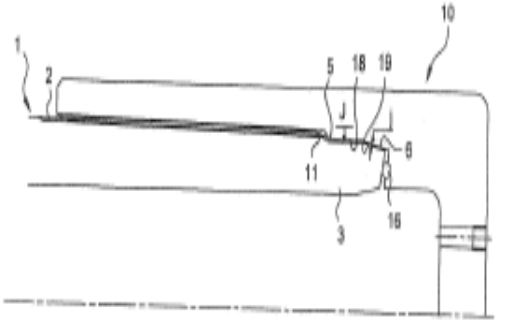

Note: Any interested individual may, within 3 months of publication of the grant, file objection thereof with the Grievance Committee after payment of grievance fees.

(19) pATENT OFFICE OF THE COOPERATION COUNCL FOR THE ARAB STATES OF THE GULF

(19) مكتب براءات الاختراع لمجلس التعاون لدول الخليج العربية

[12] **Patent**

[11] Patent No.: GC0001775 **[45] Date of Publishing the Grant of the Patent: 31/03/2012 17/2012**	**Number of the Decision to Grant the Patent: 11/28208** **Date of the Decision to Grant the Patent: 06/10/2011**
[21] Application No.: GCC/P/2006/7233 **[22] Filing Date: 18/11/2006** **[30] Priority:** **[31] Priority No. [32] Priority date [33] State** **11/281,532 17/11/2005 US** **11/443,231 30/05/2006 US** **[72] Inventors: 1- Engel, David Birenbaum، 2- Goliaszewski, Alan E. ،3- Mcdaniel, Cato R.** **[73] Owner: General Electric Company, River 1 Road, 12345 New York, Schenectady, USA** **[74] Agent: Suleiman I. Al-Ammar**	**[51]Int. CI.[7]: C10G 33/04; C23F 11/04; E21B 43/28; B01D 17/04; C09K 8/60** **[56] Cited Documents:** **- US 5622921 (DYER RICHARD J [US]) 22 April 1997** **- US 4477286 A (ROSSMANN CHRISTIAN [DE] et al.) 15 October 1984** **Examiner: Yahiya Naser Al-BuSafi**

[54] SEPARATORY AND EMULSION BREAKING PROCESSES

[57] Abstract: The invention pertains to the use of a class of acetylenic surfactants to resolve or break water and oil emulsions. The surfactants are of particular advantage in resolving crude oil emulsion of the type encountered in desalter and similar apparatus designed to extract brines from the crude as they partition to the aqueous phase in the desalter. Also the surfactants may be used to be separate oil from oil sands and similar oil/solids matrices.

No. of claims: 3

Note: Any interested individual may, within 3 months of publication of the grant, file objection thereof with the Grievance Committee after payment of grievance fees.

(19) pATENT OFFICE OF THE COOPERATION COUNCL FOR THE ARAB STATES OF THE GULF

(19) مكتب براءات الاختراع لمجلس التعاون لدول الخليج العربية

[12] **Patent**

[11] Patent No.: GC0001776 **[45] Date of Publishing the Grant of the Patent: 31/03/2012 17/2012**	**Number of the Decision to Grant the Patent: 11/26776** **Date of the Decision to Grant the Patent: 11/09/2011**
[21] Application No.: GCC/P/2006/7347 **[22] Filing Date: 06/12/2006** **[30] Priority:** **[31] Priority No. [32] Priority date [33] State** **05111884.2 09/12/2005 EP** **[72] Inventors: 1- Arend Hoek، 2- Lip Piang Kueh** **[73] Owner: Shell Internationale Research Maatschappij B. V. Carel van Bylandtlaan 30, 2596 HR, The Hauge, The Netherlands** **[74] Agent: Suleiman I. Al-Ammar**	**[51] Int. Cl.[7]: C10G 2/00, 1/04, 2/00, 1/00** **[56] Cited Documents:** **- WO 97/17137 A (SHELL INTERNATIONALE RESEARCH MAATSCHAPPIJ B.V; SHELL CANADA LIMITED) 15 May 1997** **- WO 2005/026292 A (ENI S.P.A; INSTITUT FRANCAIS DU PETROLE; ENITECNOLOGIE S.P.A MARETTO) 24 March 2005** **Examiner: Abdallah Ibrahim AL-Khatib**

[54] METHOD TO START A PROCESS FOR PRODUCING HYDROCARBONS FROM SYNTHESIS GAS

[57] Abstract: The present invention provides a method to start a steady state process for producing normally gaseous, normally liquid and optionally normally solid hydrocarbons from synthesis gas, which method comprises the steps of: (i) providing an activated catalyst in tubes of a fixed bed reactor, preferably a multitubular fixed bed reactor, the catalyst being suitable to convert synthesis gas to normally gaseous, normally liquid and optionally normally solid hydrocarbons; (ii) contacting the activated catalyst with a liquid to obtain a wetted activated catalyst; (iii) contacting the wetted activated catalyst with synthesis gas and catalytically converting the synthesis gas at an elevated temperature and pressure to obtain the normally gaseous, normally liquid and optionally normally solid hydrocarbons.

No. of claims: 9

Note: Any interested individual may, within 3 months of publication of the grant, file objection thereof with the Grievance Committee after payment of grievance fees.

(19) pATENT OFFICE OF THE COOPERATION COUNCL FOR THE ARAB STATES OF THE GULF

(19) مكتب براءات الاختراع لمجلس التعاون لدول الخليج العربية

[12] **Patent**

[11] Patent No.: GC0001777 **[45] Date of Publishing the Grant of the Patent: 31/03/2012 17/2012**	**Number of the Decision to Grant the Patent: 11/28212** **Date of the Decision to Grant the Patent: 06/10/2011**
[21] Application No.: GCC/P/2006/7401 **[22] Filing Date: 13/12/2006** **[30] Priority:** **[31] Priority No. [32] Priority date [33] State** **05112323.0 16/12/2005 EP** **[72] Inventors: 1- Marinus Johannes Reynhout،2- Carolus Matthias Anna Maria Mesters،3- Ronald Jan Dogterom** **[73] Owner: Shell Internationale Research Maatschsppij B.V., Carel van Bylandtlaan 30, 2596 HR, The Hauge, The Netherlands** **[74] Agent: Suleiman I. Al-Ammar**	**[51] Int. Cl.[7]: B01J 37/00, 35/00, 23/75, 37/18, 23/847, 23/889, 23/89; C07C 1/04** **[56] Cited Documents:** **- WO 2005/030680 A (SHELL INTERNATIONALE RESEARCH MAATSCHAPPIJ B.V; DOGTEROM, RONALD, JAN;) 07 April 2005** **Examiner: Yahiya Naser Al-BuSafi**

[54] PROCESS FOR PREPARING A CATALYST TO PRODUCE HYDROCARBONS

[57] Abstract: A process for the preparation of a catalyst or catalyst precursor, comprising the steps of: (a) admixing:

(i) a catalytically active metal or metal compound

(iii) a carrier material

(iii) a gluing agent; and

(iv) optionally one or more promoters, and/or one or more co-catalysts;

(d) forming the mixture of step (a); and

(a) (c) drying the product of step (b) for more than 5 hours at a temperature up to 100 'C to form the catalyst or catalyst precursor. The present invention has found that the catalyst material mixture does not need to be calcined after forming to achieve the required minimum strength for use in a suitable reaction, usually in a reactor, but can be simply dried over time. The action of drying is similar to the curing of wet concrete which is based on the hydration of the cement to provide the strength gain of the concrete over time. The hydration process results in progressive stiffening, hardening and strength development, and includes 'curing'. The gluing agent provides the formed catalyst material with the same ability over time.

No. of claims: 10 No. of figures: 2

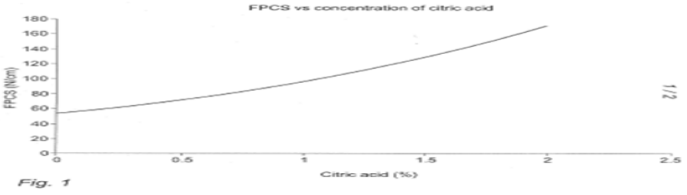

Fig. 1

Note: Any interested individual may, within 3 months of publication of the grant, file objection thereof with the Grievance Committee after payment of grievance fees.

(19) pATENT OFFICE OF THE COOPERATION COUNCL FOR THE ARAB STATES OF THE GULF

(19) مكتب براءات الاختراع لمجلس التعاون لدول الخليج العربية

[12] **Patent**

[11] Patent No.: GC0001778 **[45] Date of Publishing the Grant of the Patent: 31/03/2012 17/2012**	**Number of the Decision to Grant the Patent: 11/27242** **Date of the Decision to Grant the Patent: 14/09/2011**
[21] Application No.: GCC/P/2007/7865 **[22] Filing Date: 03/03/2007** **[30] Priority:** **[31] Priority No. [32] Priority date [33] State** **06110767.8 03/03/2006 EP**	**[51] Int. Cl.[7]: B01J 8/00, 8/20, 19/18, 19/24** **[56] Cited Documents:** **- WO 2004/054700 A (SOLVAY POLYOLEFINS EUROPE – BELGIUM ; WALWORTH, BRENT) 01 July 2004** **- EP 1564229 A (TOTAL PETROCHEMICALS RESEARCH FELUY) 17 August 2005**
[72] Inventors: 1- Daniel Siraux، 2- Alain Brusselle **[73] Owner: Total Petrochemicals Research Feluy,Zone lndustrielle C ,7181-B , Seneffe Feluy, Belgium** **[74] Agent: Suleiman I. Al-Ammar**	**Examiner: Mohammed A. Aljaffar**

[54] METHOD AND SYSTEM FOR DETERMINING CATALYST T ACTIVITY

[57] Abstract: The present invention relates to a method for determining activity of a catalyst in a polymerisation process, said polymerisation process comprising the steps of feeding a catalyst and a diluent into a storage vessel, to form a concentrated settled catalyst, feeding said concentrated settled catalyst into a mixing vessel equipped with mixing means and feeding hydrocarbon diluent into said mixing vessel, to form a diluted catalyst slurry, feeding said diluted catalyst slurry into a polymerisation reactor via a volumetric pump, and feeding at least one monomer into said polymerisation reactor to form a polymer. The method is characterised in that density of the diluted catalyst slurry is measured between an outlet of the mixing vessel and the volumetric pump, the amount of catalyst fed into the polymerisation reactor is determined based on the measured density of the diluted catalyst slurry, and the amount of catalyst fed into the polymerisation reactor is compared to the amount of the polymer formed to determine the activity of the catalyst. The invention also relates to a system suitable for carrying out the method.

No. of claims: 13 No. of figures: 1

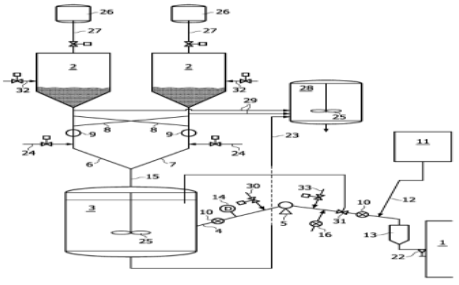

Note: Any interested individual may, within 3 months of publication of the grant, file objection thereof with the Grievance Committee after payment of grievance fees.

(19) pATENT OFFICE OF THE COOPERATION COUNCL FOR THE ARAB STATES OF THE GULF

(19) مكتب براءات الاختراع لمجلس التعاون لدول الخليج العربية

[12] **Patent**

[11] Patent No.: GC0001779 **[45] Date of Publishing the Grant of the Patent: 31/03/2012 17/2012**	**Number of the Decision to Grant the Patent: 11/26768** **Date of the Decision to Grant the Patent: 11/09/2011**
[21] Application No.: GCC/P/2007/8335 **[22] Filing Date: 16/05/2007** **[30] Priority:** **[31] Priority No. [32] Priority date [33] State** **06114277.4 19/05/2006 EP** **[72] Inventors: 1- Michiel Johannes Franciscus Maria Verhaak، 2- Jeroen Van Westrenen، 3- Leslie Andrew Chewter** **[73] Owner: Shell Internationale Research Maatschappij B. V. Carel van Bylandtlaan 30, 2596 HR, The Hauge, The Netherlands** **[74] Agent: Suleiman I. Al-Ammar**	**[51] Int. Cl.[7]: C07C1/20; C07C1/00** **[56] Cited Documents:** **- US 2003/078463 A1 (MARTENS LUC R M [BE] et al.) 24 April 2003** **- WO 02/10098 A (EXXONMOBIL CHEM PATENTS INC [US]) 07 February 2002** **Examiner: Abdallah Ibrahim AL-Khatib**

[54] PROCESS FOR THE PREPARATION OF AN OLEFIN

[57] Abstract: Process for the preparation of an olfin comprising reacting an oxygenate feed and an olefinic co-feed in a reactor in the presence of a zeolite to obtain a reaction product containing one or more olefins; wherein the olefinic co-feed is at least partially obtained ex-situ during a first phase and at least partially obtained in-situ during a subsequent second phase.

No. of claims: 9

Note: Any interested individual may, within 3 months of publication of the grant, file objection thereof with the Grievance Committee after payment of grievance fees.

(19) pATENT OFFICE OF THE COOPERATION COUNCL FOR THE ARAB STATES OF THE GULF

(19) مكتب براءات الاختراع لمجلس التعاون لدول الخليج العربية

[12] **Patent**

[11] Patent No.: GC0001780 **[45] Date of Publishing the Grant of the Patent: 31/03/2012 17/2012**	**Number of the Decision to Grant the Patent: 11/26763** **Date of the Decision to Grant the Patent: 11/09/2011**
[21] Application No.: GCC/P/2007/8336 **[22] Filing Date: 16/05/2007** **[30] Priority:** **[31] Priority No. [32] Priority date [33] State** **06114288.1 19/05/2006 EP** **[72] Inventors: 1- Jeroen Van Westrenen، 2- Leslie Andrew Chewter، 3- Michiel Johannes Franciscus Maria Verhaak** **[73] Owner: Shell Internationale Research Maatschappij B. V. Carel van Bylandtlaan 30, 2596 HR, The Hauge, The Netherlands** **[74] Agent: Suleiman I. Al-Ammar**	**[51] Int. Cl.[7]: C07C11/06, 4/06, 11/00, 4/00** **[56] Cited Documents:** **- US 6307117 B1 (TSUNODA TAKASHI [JP] et al.) 23 October 2001** **Examiner: Abdallah Ibrahim AL-Khatib**

[54] PROCESS FOR THE PREPARATION OF PROPYLENE

[57] Abstract: Process for the preparation of propylene, wherein a diluted olefinic hydrocarbon feed, comprising in the range of 1 to 99 vol% of olefinic hydrocarbon feed and 1-99 vol% of one or more diluents, is contacted with a solid zeolite catalyst at a Gas Hourly Space Velocity, as measured at standard temperature and pressure of 23 °C and 1 bar, of at least 15,000 ml diluted olefinic hydrocarbon feed/gram zeolite catalyst/hour.

No. of claims: 10

Note: Any interested individual may, within 3 months of publication of the grant, file objection thereof with the Grievance Committee after payment of grievance fees.

(19) pATENT OFFICE OF THE COOPERATION COUNCL FOR THE ARAB STATES OF THE GULF

(19) مكتب براءات الاختراع لمجلس التعاون لدول الخليج العربية

[12] **Patent**

[11] Patent No.: GC0001781 **[45] Date of Publishing the Grant of the Patent: 31/03/2012 17/2012**	**Number of the Decision to Grant the Patent: 11/26771** **Date of the Decision to Grant the Patent: 11/09/2011**
[21] Application No.: GCC/P/2007/8548 **[22] Filing Date: 20/06/2007** **[30] Priority:** **[31] Priority No. [32] Priority date [33] State** **06115727,7 20/06/2006 EP** **[72] Inventors: 1- Franciscus Antonius Henri Janssen** **[73] Owner: Shell Internationale Research Maatschappij B. V. Carel van Bylandtlaan 30, 2596 HR, The Hauge, The Netherlands** **[74] Agent: Suleiman I. Al-Ammar**	**[51] Int. Cl.[7]: F16L 13/10, 13/00** **[56] Cited Documents:** **- DE 1750031 A1 (ROHRLEITUNGEN ISOLIERUNGEN VEB) 30 September 1971** **Examiner: Abdallah Ibrahim AL-Khatib**

[54] METHOD OF JOINING A PAIR OF TUBULAR ENDS

[57] Abstract: A method of joining a pair of tubular ends (1,2) comprises:
- providing the tubular ends with intermeshing tapered edges (3,4);
- joining the tubular ends by inserting an adhesive between the tapered edges and pressing the tapered edges (3,4) together;
- arranging an axial load carrier collar (5) around the joined tubular ends;
- inserting an adhesive between the inner surface of the collar (5) and the outer surfaces of the joined tubular ends (3,4); and
- inducing the adhesive to bond the inner surface of the collar (5) to the outer surfaces of the joined tubular ends.
The axial load carrier collar (5) may be equipped with a series of flexible reinforcement strips (8,9), which carry a majority of axial loads exerted on the tubular joint, such that only a minimal axial load is exerted on the bonded tapered edges (3,4).

No. of claims: 8 No. of figures: 2

Fig.1.

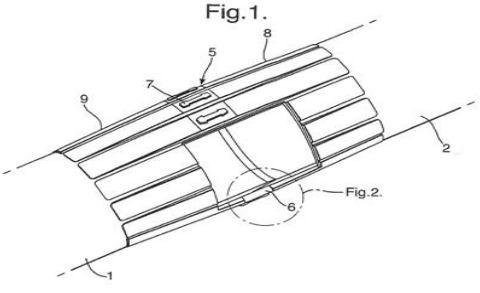

Fig.2.

Note: Any interested individual may, within 3 months of publication of the grant, file objection thereof with the Grievance Committee after payment of grievance fees.

(19) pATENT OFFICE OF THE COOPERATION COUNCL FOR THE ARAB STATES OF THE GULF

(19) مكتب براءات الاختراع لمجلس التعاون لدول الخليج العربية

[12] **Patent**

[11] Patent No.: GC0001782 **[45] Date of Publishing the Grant of the Patent: 31/03/2012 17/2012**	**Number of the Decision to Grant the Patent: 11/26784** **Date of the Decision to Grant the Patent: 11/09/2011**
[21] Application No.: GCC/P/2007/9565 **[22] Filing Date: 28/11/2007** **[30] Priority:** **[31] Priority No. [32] Priority date [33] State** **60/868,037 30/11/2006 US** **[72] Inventors: 1- Peter Veenstra، 2- Scott Lee Wellington، 3- Lloyd Anthony Clomburg Jr، 4- Andreas Nicholas Matzakos** **[73] Owner: Shell Internationale Research Maatschsppij B.V., Carel van Bylandtlaan 30, 2596 HR, The Hauge, The Netherlands** **[74] Agent: Suleiman I. Al-Ammar**	**[51] Int. Cl.[7]: C01B 3/38, 3/48, 3/50, 3/56** **[56] Cited Documents:** **- EP 1582502 A1 (GENERAL ELECTRIC COMPANY) 05 October 2005** **Examiner: Abdallah Ibrahim AL-Khatib**

[54] SYSTEM AND PROCESSES FOR PRODUCING HYDROGEN AND CARBON DIOXIDE

[57] Abstract: A process and a system are provided ford producing and separating hydrogen and carbon dioxide from a hydrocarbon and steam. A hydrocarbon and steam are steam reformed and the reformed gas, and the hydrogen-Depleted gas is reformed and shift reacted again to produce more hydrogen and carbon dioxide. The hydrogen and carbon dioxide are then separated.

No. of claims: 25 No. of figures: 3

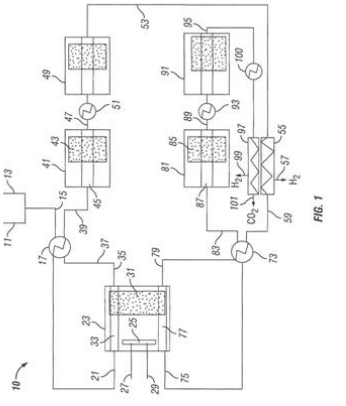

Note: Any interested individual may, within 3 months of publication of the grant, file objection thereof with the Grievance Committee after payment of grievance fees.

(19) pATENT OFFICE OF THE COOPERATION COUNCL FOR THE ARAB STATES OF THE GULF

(19) مكتب براءات الاختراع لمجلس التعاون لدول الخليج العربية

[12] **Patent**

[11] Patent No.: GC0001783 **[45] Date of Publishing the Grant of the Patent: 31/03/2012 17/2012**	**Number of the Decision to Grant the Patent: 11/26781** **Date of the Decision to Grant the Patent: 11/09/2011**
[21] Application No.: GCC/P/2007/9717 **[22] Filing Date: 12/12/2007** **[30] Priority:** **[31] Priority No. [32] Priority date [33] State** **0611028 18/12/2006 FR** **0720880 14/10/2007 GB** **0800267,7 08/01/2008 GB** **[72] Inventors: 1-Vergel César، 2- Mayeur Vincent، 3- Mariette Laurent، 4- Morvan Gildas، 5- Hecquet Michael** **[73] Owner: TOTAL Raffinage Marketing, 24 Cours Michelet, f-92800, PUTEAUX, France** **[74] Agent: Suleiman I. Al-Ammar**	**[51] Int. Cl.[7]: C10G 45/10** **[56] Cited Documents:** **- US 2002130063 A1 (INST FRANCAIS DU PETROLE) 19 September 2002** **- US 2004230085 A1 (FORTUM OYJ et al.) 18 November 2004** **Examiner: Abdallah Ibrahim AL-Khatib**

[54] PROCESS FOR HYDROTREATING A DIESEL FUEL FEEDSTOCK, HYDROTREATING UNIT FOR THE IMPLEMENTATION OF THE SAID PROCESS, AND CORRESPONDING HYDROREFINING UNIT

[57] Abstract: A process for the catalytic hydrotreating of a feedstock of petroleum origin of diesel fuel type and of a feedstock of biological origin based on vegetable oils and/or animal fats in a stationary bed catalytic hydrotreating unit, the said process being characterized in that the feedstock of petroleum origin is introduced into the said reactor upstream of the feedstock of biological origin is provided. Meanwhile a catalytic hydrotreating unit for the implementation of the said process and to a corresponding hydrorefining unit are provided.

No. of claims: 38 No. of figures: 4

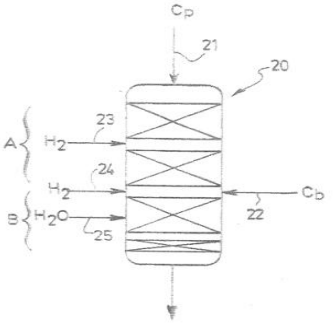

Note: Any interested individual may, within 3 months of publication of the grant, file objection thereof with the Grievance Committee after payment of grievance fees.

(19) pATENT OFFICE OF THE COOPERATION COUNCL FOR THE ARAB STATES OF THE GULF

(19) مكتب براءات الاختراع لمجلس التعاون لدول الخليج العربية

[12] **Patent**

[11] Patent No.: GC0001784 **[45] Date of Publishing the Grant of the Patent: 31/03/2012 17/2012**	**Number of the Decision to Grant the Patent: 11/27882** **Date of the Decision to Grant the Patent: 28/09/2011**
[21] Application No.: GCC/P/2007/9722 **[22] Filing Date: 12/12/2007** **[30] Priority:** **[31] Priority No. [32] Priority date [33] State** **11/609,585 12/12/2006 US** **[72] Inventors: 1- John David Juda، 2- Eugene Charles Chauviere, III** **[73] Owner: Hydril USA Manufacturing LLC, Texas,77032 , Houston ,USA** **[74] Agent: Suleiman I. Al-Ammar**	**[51] Int. Cl.[7]: E21B 7/00** **[56] Cited Documents:** **- US 2004/0079909 A1 (ANTHONYP.FOSTER) 29 April 2004** **Examiner: Fahad M. al-Baker**

[54] DUAL-DIRECTION RAM-TYPE BLOWOUT PREVENTER SEAL

[57] Abstract: A ram-type blowout preventer and method of actuating thereof. The ram-type blowout preventer includes a seal carrier disposed about a vertical bore between the body and adjacent to the horizontal bore. The seal carrier is configured to be thrust into sealing engagement with at least one of a pair of ram blocks of the ram-type blowout preventer by fluid pressure above the ram blocks and a sealing device forms a seal between the body and the seal carrier.

No. of claims: 19 No. of figures: 5

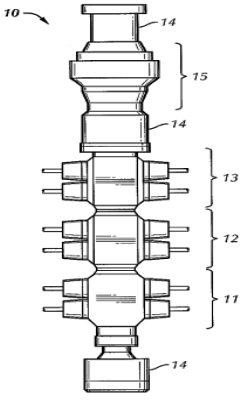

Note: Any interested individual may, within 3 months of publication of the grant, file objection thereof with the Grievance Committee after payment of grievance fees.

(19) pATENT OFFICE OF THE COOPERATION COUNCL FOR THE ARAB STATES OF THE GULF

(19) مكتب براءات الاختراع لمجلس التعاون لدول الخليج العربية

[12] **Patent**

[11] Patent No.: GC0001785 **[45] Date of Publishing the Grant of the Patent: 31/03/2012 17/2012**	**Number of the Decision to Grant the Patent: 11/27744** **Date of the Decision to Grant the Patent: 28/09/2011**
[21] Application No.: GCC/P/2008/12283 **[22] Filing Date: 30/11/2008** **[30] Priority:** **[31] Priority No. [32] Priority date [33] State** **61/007,670 14/12/2007 US** **[72] Inventors: 1- Harvey E. Andersen، 2- Christopher P. Christenson، 3- Charles W. Lipp، 4- John R. Mayer، 5- Thomas J. Kling، 6- Victor R. Fey، 7- Laurence G. Britton، 8- Michael J. Rangitsch، 9- Michael L. Hutchison، 10- Matthias Schaefer** **[73] Owner: Dow Technology Investments LLC, ow CenterD 2020,48674 ،Midland , Michigan,USA** **[74] Agent: Saud M. A. Shawwaf**	**[51] Int. Cl.[7]: B01J 19/26; B01F 3/02, 5/04** **[56] Cited Documents:** **- US 3706534 A (VERHEUL CORNELIS M et al.) 19 December 1972** **Examiner: Fahad M. al-Baker**

[54] LOW SHEAR GAS MIXER

[57] Abstract: A gas mixer for mixing a first gas stream with a second gas stream includes an impact labyrinth in the first gas stream having structures, e. g., corrugated walls, forming a tortuous path through which the first gas stream must pass en route to a mixing point in the gas mixer. The labyrinth fosters ignition of particles entrained in the first gas stream Elongate, straight pipes receive the first gas stream from the impact labyrinth and carrying the first gas stream to the mixing point. The pipes are positioned with a vessel carrying the second gas stream. The pipes have openings which are substantially aligned with the flow direction of the second gas stream at the mixing point thereby introducing the first gas stream into the second gas stream in a low shear manner.

No. of claims: 22 No. of figures: 5

Note: Any interested individual may, within 3 months of publication of the grant, file objection thereof with the Grievance Committee after payment of grievance fees.

(19) pATENT OFFICE OF THE COOPERATION COUNCL FOR THE ARAB STATES OF THE GULF

(19) مكتب براءات الاختراع لمجلس التعاون لدول الخليج العربية

[12] **Patent**

[11] Patent No.: GC0001786 **[45] Date of Publishing the Grant of the Patent: 31/03/2012 17/2012**	**Number of the Decision to Grant the Patent: 11/28220** **Date of the Decision to Grant the Patent: 06/10/2011**
[21] Application No.: GCC/P/2008/12067 **[22] Filing Date: 01/11/2008** **[30] Priority:** **[31] Priority No. [32] Priority date [33] State** **0721410.9 31/10/2007 GB**	**[51]Int. Cl.[7]: B29C 55/18, 55/06** **[56] Cited Documents:** **- US 3233029 A (OLE-BENDT RASMUSSEN) 1 February 1966** **- US 3478142 A (GREENE MAX E) 11 November 1969** **- US 3491185 A (RASMUSSEN OLE-BENDT) 20 January 1970**
[72] Inventors: 1- Ole-Bendt Rasmussen، 2- Nikolai Wettergren Rasmussen **[73] Owner: Ole-Bendt Rasmussen, 50 Obersecki, CH 6318, Walchwil, Switzerland** **[74] Agent: Saud M. A. Shawwaf**	**Examiner: Yahiya Naser Al-BuSafi**

[54] METHOD AND APPARATUS FOR LONGITUDINAL ORIENTATION OF THERMOPLASTIC FILM MATERIAL

[57] Abstract: Method and apparatus for longitudinal orientation of thermoplastic film material 4 comprises a width-reduction zone upstream of the longitudinal stretching zone, through which the width of the film is gradually reduced so as to allow longitudinal stretching without necking. The width-reduction zone comprises at least one, preferably several, pairs of pleating rollers 16, 17 comprising intermeshing grooves or discs for pleating the material, the length of said width reduction zone preferably being less than 3 times the original width of the film. The width-reducing zone has upstream 14 and downstream 15 rollers or roller assemblies, with curved axes and optionally also conveyor belts for providing smooth width reduction. Longitudinal stretching is preferably between at least two, and preferably more than two, pairs of stretching rollers 9, 10, 11, 12 which are relatively close together. The pleats may be provided in several stages with increasing pleats per stage, while guiding means preferably lay all the pleats to one side. The method allows achievement of high tensile strength, yield point, resistance to tear propagation and puncture resistance, especially for polyethylene and polypropylene films.

No. of claims: 36 No. of figures: 11

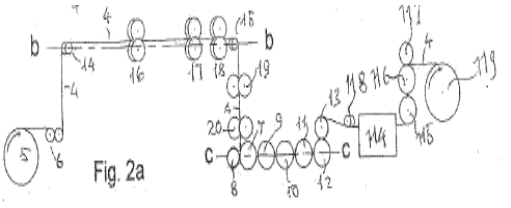

Note: Any interested individual may, within 3 months of publication of the grant, file objection thereof with the Grievance Committee after payment of grievance fees.

(19) pATENT OFFICE OF THE COOPERATION COUNCL FOR THE ARAB STATES OF THE GULF

(19) مكتب براءات الاختراع لمجلس التعاون لدول الخليج العربية

[12] **Patent**

[11] Patent No.: GC0001787 **[45] Date of Publishing the Grant of the Patent: 31/03/2012 17/2012**	**Number of the Decision to Grant the Patent: 11/26846** **Date of the Decision to Grant the Patent: 11/09/2011**
[21] Application No.: GCC/P/2000/956 **[22] Filing Date: 15/10/2000** **[30] Priority:** **[31] Priority No. [32] Priority date [33] State** **09/419,842 15/10/1999 US** **[72] Inventors: 1- Frank F. Chang، 2- Qi Qu، 3- Matthew J. Miller** **[73] Owner: Schlumberger Technology B.V., Parkstraat 84-89, 2514 JG, The Hauger, The Netherlands** **[74] Agent: Suleiman I. Al-Ammar**	**[51] Int. Cl.[7]: E21B 43/27; E21B 43/25** **[56] Cited Documents:** **- US 5034140 A (GARDNER TOMMY R et al.) 23 July 1991** **- US 3923100 A (BELLOS THOMAS J et al.) 02 December 1975** **- US 4790958 A (TEOY ARTHUR S) 13 December 1988** **Examiner: Mohammad Al-Ismael**

[54] A novel fluid system having controllable reversible viscosity

[57] Abstract: This Invention relates to a novel reversible thickener, i.e., a fluid whose viscosity can be carefully modulated - from very low viscosity to sufficient viscosity to act as a barrier to further flow; particularly preferred embodiments are directed to fluids and methods for stimulating hydrocarbon low viscosity to sufficient viscosity to act as a barrier to further flow; particularly preferred embodiments are directed to fluids and methods for stimulating hydrocarbon low viscosity to sufficient viscosity to act as a barrier to further flow; particularly preferred - bearing formations - i.e., to increase the production of oil/gas from the formation. In particular, the present invention is directed to a family of fluids (and methods incorporating those fluids) intended to be pumped through a wellbore and into the hydrocarbon-bearing formation.

No. of claims: 24 No. of figures: 14

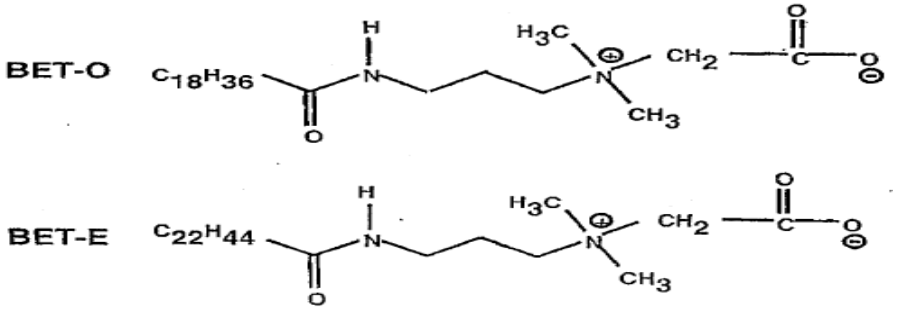

Note: Any interested individual may, within 3 months of publication of the grant, file objection thereof with the Grievance Committee after payment of grievance fees.

(19) pATENT OFFICE OF THE COOPERATION COUNCL FOR THE ARAB STATES OF THE GULF

(19) مكتب براءات الاختراع لمجلس التعاون لدول الخليج العربية

[12] **Patent**

[11] Patent No.: GC0001788 **[45] Date of Publishing the Grant of the Patent: 31/03/2012 17/2012**	**Number of the Decision to Grant the Patent: 11/26814** **Date of the Decision to Grant the Patent: 11/09/2011**
[21] Application No.: GCC/P/2003/2524 **[22] Filing Date: 26/02/2003** **[30] Priority:** **[31] Priority No. [32] Priority date [33] State** **0205014,4 04/03/2002 GB** **[72] Inventors: 1- Robert William Clarke، 2- Robert Croll، 3- Andrew Richard Lucy، 4- Bruce Leo Williams** **[73] Owner: Bp Chemicals Limited, Britannic House, 1 Finsbury Circus London , EC2M 7BA, United Kingdom** **[74] Agent: Suleiman I. Al-Ammar**	**[51]Int. Cl.[7]: C07C 7/152, 67/04, 67/05** **[56] Cited Documents:** **- Chemical Process", Research Disclosure, Kenneth Mason Publications, Hampshire, GB, No. 838, 1 June ,1992** **- WO 98/05620 A1 (BP CHEMICALS LWHTED) 12 February 1998** **- EP 0985657 A1 (BP CHEMICALS LIMITED) 15 March 2000** **- US 6147273 A (STICKNEY et al.) 14 November 2000** **- WO 01190043 A1 (AVENT1S RESEARCH & TECHNOLOGIES GMBH & CO KG) 29 November 2001** **- W0 01/83103 A2 (SAUDI BASIC INDUSTRIE ORPORATION) 8 November 2001** **- W0 00/37399 A1 (BP CHEMICALS LIMITED) 9 June 2000** **Examiner: Bander M. Al-Thobity**

[54] PROCESS FOR THE PRODUCTION OF AN ALKENYL CARBOXYLATE OR AN ALKYL CARBOXYLATE

[57] Abstract: Integrated processes for the production of alkenyl carboxylate and alkyl carboxylane comprising oxidation of a C; to C4 alkane to produce the corresponding alkene and carboxylic acid, separation of the product stream to give a gaseous stream comprising the alkene and unreacted alkane, subsequent separation of the aikene and the alkane into respective streams rich in alkene and alkane, and use of the alkene rich stream in the production of either alkenyl carboxylate or alkyl carboxylate.

No. of claims: 36 No. of figures: 1

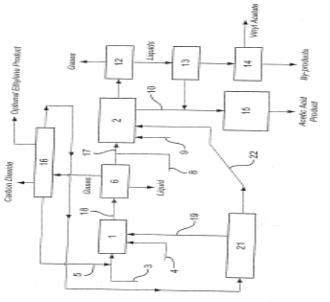

Note: Any interested individual may, within 3 months of publication of the grant, file objection thereof with the Grievance Committee after payment of grievance fees.

(19) pATENT OFFICE OF THE COOPERATION COUNCL FOR THE ARAB STATES OF THE GULF

(19) مكتب براءات الاختراع لمجلس التعاون لدول الخليج العربية

[12] **Patent**

[11] Patent No.: GC0001789 **[45] Date of Publishing the Grant of the Patent: 31/03/2012 17/2012**	**Number of the Decision to Grant the Patent: 11/26872** **Date of the Decision to Grant the Patent: 11/09/2011**
[21] Application No.: GCC/P/2003/2623 **[22] Filing Date: 29/04/2003** **[30] Priority:** **[31] Priority No. [32] Priority date [33] State** **0211560.8 20/05/2002 GB** **[72] Inventor: Michael James Muskett** **[73] Owner: Bp Chemicals Limited, Britannic House, 1 Finsbury Circus, Ec2m 7ba, London, United Kingdom** **[74] Agent: Suleiman I. Al-Ammar**	**Int. Cl.[7]: C07C 51/12, 53/08** **[56] Cited Documents:** **- EP 0849250 A (BP CHEM INT LTD) 24 June 1998** **- EP 0846674 A (BP CHEM INT LTD) 10 June 1998** **- FR 2795410 A (ACETEX CHIMIE) 29 December 2000** **- US 5770768 A (PERRON ROBERT et al.) 23 June 1998** **- US 5237097 A (SMITH DAVID W et al.) 17 August 1993** **Examiner: Fahed Zoaid AlMutairi**

[54] PROCESS FOR THE PRODUCTION OF ACETIC ACID

[57] Abstract: A process for the production of acetic acid which comprises carbonylating methanol and/or a reactive derivative thereof in one or more reactors in a liquid reaction composition comprising iridium carbonylation catalyst, ruthenium promoter, methyl iodide co-catalyst, methyl acetate, acetic acid and water. The liquid reaction composition from the one or more reactors is passed to one or more flash separation stage to form (i) a vapour fraction comprising condensable components and a low pressure off-gas comprising carbon monoxide and (ii) a liquid fraction comprising iridium carbonylation catalyst, ruthenium promoter and acetic acid solvent. The condensable components are separated from the low pressure off-gas. The concentration of carbon monoxide in the low pressure off-gas is maintained according to the formula: Y>mX+C

Wherein Y is the molar concentration of carbon monoxide in the low pressure off-gas, X is the concentration in ppm by weight of ruthenium in the liquid reaction composition, m is about 0.012 and C is about -8.7.

No. of claims: 30 No. of figures: 2

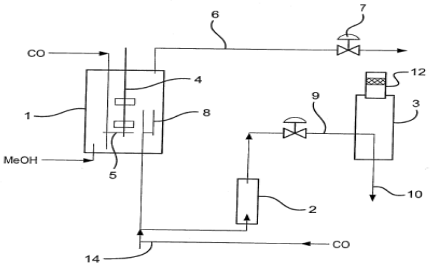

Note: Any interested individual may, within 3 months of publication of the grant, file objection thereof with the Grievance Committee after payment of grievance fees.

(19) pATENT OFFICE OF THE
COOPERATION COUNCL FOR
THE ARAB STATES OF THE GULF

(19) مكتب براءات الاختراع
لمجلس التعاون لدول الخليج العربية

[12] **Patent**

[11] Patent No.: GC0001790 **[45] Date of Publishing the Grant of the Patent: 31/03/2012 17/2012**	**Number of the Decision to Grant the Patent: 11/26868** **Date of the Decision to Grant the Patent: 11/09/2011**
[21] Application No.: GCC/P/2004/3185 **[22] Filing Date: 25/01/2004** **[30] Priority:** **[31] Priority No. [32] Priority date [33] State** **60/442,527 27/01/2003 US** **[72] Inventor: Bruce I Rosen** **[73] Owner: Bp Chemicals Limited, Britannic House, 1 Finsbury Circus London , EC2M 7BA, United Kingdom** **[74] Agent: Suleiman I. Al-Ammar**	**Int. Cl.[7]: B01J 21/04, 23/68, 37/00; C07C 51/821, 53/08** **[56] Cited Documents:** **- GB 1329451 A (UNION CARBIDE CORP) 12 September 1973** **Examiner: Fahed Zoaid AlMutairi**

[54] OXIDATION CATALYST AND ITS PREPARATION

[57] Abstract: The present invention provides a method of preparation of a supported catalyst composition suitable for the oxidation of ethane to ethylene and/or acetic acid, and/or the oxidation of ethylene to acetic acid, which supported catalyst composition comprises a catalyst, comprising one or more metal components, on a support comprising alpha-alumina, and which method comprises (a) forming a slurry comprising the one or more metal components, and alpha-alumina support particles or an alpha-alumina support precursor, (b) spray-drying the slurry, and, optionally, (c) calcining the spray-dried slurry to form the supported catalyst composition. The present invention also provides a supported catalyst composition formed by the above method, and a process for the selective oxidation of ethane to ethylene and/or acetic acid, and/or the selective oxidation of ethylene to acetic acid utilising the supported catalyst composition.

No. of claims: 21

Note: Any interested individual may, within 3 months of publication of the grant, file objection thereof with the Grievance Committee after payment of grievance fees.

(19) pATENT OFFICE OF THE COOPERATION COUNCL FOR THE ARAB STATES OF THE GULF

(19) مكتب براءات الاختراع لمجلس التعاون لدول الخليج العربية

[12] Patent

[11] Patent No.: GC0001791 **[45] Date of Publishing the Grant of the Patent: 31/03/2012 17/2012**	**Number of the Decision to Grant the Patent: 11/26866** **Date of the Decision to Grant the Patent: 11/09/2011**
[21] Application No.: GCC/P/2004/3643 **[22] Filing Date: 17/07/2004** **[30] Priority:** **[31] Priority No. [32] Priority date [33] State** **0316756.6 17/07/2003 GB** **[72] Inventors: 1- Andrew Miller، 2- Marc John Payne، 3- David John Law، 4- George Ernest Morris، 5- Anthony Haynes، 6- John Glenn Sunley** **[73] Owner: BP CHEMICALS LIMITED, Chertsey road, Sunbury-on-Thames, Middlesex, TW16 7BP, United Kingdom** **[74] Agent: Suleiman I. Al-Ammar**	**[51] Int. Cl.7: C07C 51/12, 53/08; B01J 23/46** **[56] Cited Documents:** **- EP 1099680 A2 (BP CHEMICAL LIMITED) 16 May 2001** **Examiner: Fahed Zoaid AlMutairi**

[54] CATALYST AND PROCESS FOR THE PRODUCTION OF ACETIC ACID

[57] Abstract: A catalyst and process for the production of acetic acid by the carbonylation of methanol and/or a reactive derivative thereof. The catalyst system comprises an iridium carbonylation catalyst, methyl iodide co-catalyst, optionally at least one of ruthenium, osmium, rhenium, zinc, gallium, tungsten, cadmium, mercury and indium and at least one non-hydrohalogenoic acid promoter. The non-hydrohalogenoic acid may be an oxoacid, a superacid and/or a heteropolyacid.

No. of claims: 31

Note: Any interested individual may, within 3 months of publication of the grant, file objection thereof with the Grievance Committee after payment of grievance fees.

(19) pATENT OFFICE OF THE COOPERATION COUNCL FOR THE ARAB STATES OF THE GULF

(19) مكتب براءات الاختراع لمجلس التعاون لدول الخليج العربية

[12] **Patent**

[11] Patent No.: GC0001792 **[45] Date of Publishing the Grant of the Patent: 31/03/2012 17/2012**	**Number of the Decision to Grant the Patent: 11/26804** **Date of the Decision to Grant the Patent: 11/09/2011**
[21] Application No.: GCC/P/2006/7494 **[22] Filing Date: 20/12/2006** **[30] Priority:** **[31] Priority No. [32] Priority date [33] State** **0526232,4 22/12/2005 GB** **0507087,4 07/04/2006 GB** **0607088,2 07/04/2006 GB** **0609902,2 18/05/2006 GB** **0620336,8 12/10/2006 GB** **0620337,6 12/10/2006 GB** **0620815,1 19/10/2006 GB** **0620819,9 19/10/2006 GB**	**[51]Int. Cl.[7]: A61K39/09, A61K39/385** **[56] Cited Documents:** **- US 2003/099672 A1 (SCHULTZ DOMINIQUE [FR]) 29 May 2003** **- WO 02/00249 A (SMITHKLINE BEECHAM BIOLOG [BE]; BOUTRIAU DOMINIQUE [BE]; CAPIAU CARINE) 03 January 2002** **- WO 00/56360 A (SMITHKLINE BEECHAM BIOLOG [BE]; CAPIAU CARINE [BE]; DESCHAMPS MARGUERI) 28 September 2000** **- WO 03/051392 A (GLAXOSMITHKLINE BIOLOG SA [BE]; LAFERRIERE CRAIG ANTHONY JOSEP [CA]; P) 26 June 2003** **- Lexau Catherine A et al.: "Changing Epidemiology Of Invasive Pneumococcal Disease Among Older Adults In The Era Of Pediatric Pneumococcal Conjugate Vaccine. 26 October 2005** **- Moore, Mathew R.: "Epidemiology of invasive pneumococcal disease in adults" 17 November 2005**
[72] Inventors: 1- Philippe Vincent Hermand، 2- Nathalie Marie-Josephe Garcon، 3- Marcelle Paulette Van Mechelen، 4- Ralph Leon Biemans، 5- Jan Poolman **[73] Owner: GlaxoSmithKline Biologicals s.a., 89 Rue De lInstitut, 1330-B, ensartRix, Belgium** **74] Agent: Suleiman I. Al-Ammar**	**Examiner: Nouf Saleh Alnassban**

[54] IMPROVED STREPTOCOCCUS PNEUMONIAE VACCINE

[57] Abstract: The present invention is in the field of pneumococcal capsular saccharide conjugate vaccines. Specifically, an immunogenic composition for infants is provided comprising a multivalent Streptococcus pneumoniae vaccine comprising 2 or more capsular saccharide conjugates from different serotypes, wherein the composition comprises a serotype 22F saccharide conjugate. Such a vaccine may be used in infant populations to reduce the incidence of elderly pneumococcal disease such as exacerbations of COPD and/or IPD.

No. of claims: 118 No. of figures: 10

Note: Any interested individual may, within 3 months of publication of the grant, file objection thereof with the Grievance Committee after payment of grievance fees.

(19) pATENT OFFICE OF THE COOPERATION COUNCL FOR THE ARAB STATES OF THE GULF

(19) مكتب براءات الاختراع لمجلس التعاون لدول الخليج العربية

[12] Patent

[11] Patent No.: GC0001793 **[45] Date of Publishing the Grant of the Patent: 31/03/2012 17/2012**	**Number of the Decision to Grant the Patent: 11/26835** **Date of the Decision to Grant the Patent: 11/09/2011**
[21] Application No.: GCC/P/2007/7669 **[22] Filing Date: 27/01/2007** **[30] Priority:** **[31] Priority No. [32] Priority date [33] State** **0601861.8 30/01/2006 GB** **[72] Inventors: 1- Payne, Marc John، 2- Miller, Andrew John** **[73] Owner: BP Chemicals Limited, Chertsey road, Sunbury-on-Thames, TW 16 7BP, Middlesex, United Kingdom** **[74] Agent: Suleiman I. Al-Ammar**	**[51] Int. Cl.[7]: C07C 51/12, 53/08** **[56] Cited Documents:** **- EP 0643034 A1 (BP CHEM INT LTD [GB]) 15 March 1995** **- EP 0794948 A1 (BP CHEM INT LTD [GB]) 27 December 1996** **- WO/009939 A (BP CHEM INT LTD [GB]; HAYNESS ANTONY [GB]; LAW DAVID JOHN [GB]; MILLER) 03 February 2005** **Examiner: Fahed Zoaid AlMutairi**

[54] PROCESS FOR THE PRODUCTION OF ACETIC ACID

[57] Abstract: A process for the production of acetic acid by carbonylating methanol and/or a reactive derivative thereof with carbon monoxide in the presence of a promoted iridium carbonylation catalyst wherein the promoters are boron and gallium.

No. of claims: 15

Note: Any interested individual may, within 3 months of publication of the grant, file objection thereof with the Grievance Committee after payment of grievance fees.

(19) pATENT OFFICE OF THE COOPERATION COUNCL FOR THE ARAB STATES OF THE GULF

(19) مكتب براءات الاختراع لمجلس التعاون لدول الخليج العربية

[12] Patent

[11] Patent No.: GC0001794 **[45] Date of Publishing the Grant of the Patent: 31/03/2012 17/2012**	**Number of the Decision to Grant the Patent: 11/26822** **Date of the Decision to Grant the Patent: 11/09/2011**
[21] Application No.: GCC/P/2007/7670 **[22] Filing Date: 27/01/2007** **[30] Priority:** **[31] Priority No. [32] Priority date [33] State** **0601865.9 30/01/2006 GB** **[72] Inventors: 1- Miller, Andrew John،** **2- Payne, Marc John** **[73] Owner: BP Chemicals Limited, Chertsey road, Sunbury-on-Thames, TW 16 7BP, Middlesex, United Kingdom** **[74] Agent: Suleiman I. Al-Ammar**	**[51] Int. Cl.[7]: C07C 51/12, 53/08** **C07C 51/12, 53/08** **[56] Cited Documents:** **- EP 0749948 A1 (BP CHEM INT LTD [GB]) 27 December 1996** **- GB 2327420 A (BP CHEM INT LTD [GB]) 27 January 1999** **Examiner: Fahed Zoaid AlMutairi**

[54] PROCESS FOR THE PRODUCTION OF ACETIC ACID

[57] Abstract: A process for the production of acetic acid by carbonylating methanol and/or a reactive derivative thereof with carbon monoxide in the presence of a promoted iridium carbonylation catalyst wherein the promoters are indium and rhenium.

No. of claims: 16

Note: Any interested individual may, within 3 months of publication of the grant, file objection thereof with the Grievance Committee after payment of grievance fees.

(19) pATENT OFFICE OF THE
COOPERATION COUNCL FOR
THE ARAB STATES OF THE GULF

(19) مكتب براءات الاختراع
لمجلس التعاون لدول الخليج العربية

[12] Patent

[11] Patent No.: GC0001795 **[45] Date of Publishing the Grant of the Patent: 31/03/2012 17/2012**	**Number of the Decision to Grant the Patent: 11/26852** **Date of the Decision to Grant the Patent: 11/09/2011**
[21] Application No.: GCC/P/2007/7671 **[22] Filing Date: 27/01/2007** **[30] Priority:** **[31] Priority No. [32] Priority date [33] State** **0601863.4 30/01/2006 GB** **[72] Inventors: 1- Miller, Andrew John،** **2- Smith , Stephen James** **[73] Owner: BP Chemicals Limited, Chertsey road, Sunbury-on-Thames, TW 16 7BP, Middlesex, United Kingdom** **[74] Agent: Suleiman I. Al-Ammar**	**[51] Int. Cl.[7]: C07C 51/12, 53/08** **[56] Cited Documents:** **- EP 749948 A1 (BP CHEM INT LTD [GB]) 27 December 1996** **- WO 01/14055 A (EASTMAN CHEM CO [US]) 01 March 2001** **Examiner: Fahed Zoaid AlMutairi**

[54] PROCESS FOR THE PRODUCTION OF ACETIC ACID

[57] Abstract: A process for the production of acetic acid by carbonylating methanol and/or a reactive derivative thereof with carbon monoxide in the presence of an iridium promoted carbonylation catalyst wherein the promoters are ruthenium and at least one of niobium and tantalum.

No. of claims: 16

Note: Any interested individual may, within 3 months of publication of the grant, file objection thereof with the Grievance Committee after payment of grievance fees.

(19) pATENT OFFICE OF THE COOPERATION COUNCL FOR THE ARAB STATES OF THE GULF

(19) مكتب براءات الاختراع لمجلس التعاون لدول الخليج العربية

[12] Patent

[11] Patent No.: GC0001796 **[45] Date of Publishing the Grant of the Patent: 31/03/2012 17/2012**	**Number of the Decision to Grant the Patent: 11/26786** **Date of the Decision to Grant the Patent: 11/09/2011**
[21] Application No.: GCC/P/2007/8418 **[22] Filing Date: 30/05/2007** **[30] Priority:** **[31] Priority No. [32] Priority date [33] State** **06252836.9 01/06/2006 EP** **[72] Inventors: 1- Bolton, Leslie William،** **2- Gracey, Benjamin Patrick** **[73] Owner: BP Chemicals Limited, Chertsey road, Sunbury-on-Thames, TW 16 7BP, Middlesex, United Kingdom** **[74] Agent: Suleiman I. Al-Ammar**	**[51] Int. Cl.[7]: C07C29/151, 29/00** **[56] Cited Documents:** **- US 4831060 A (STEVENS REX R et al.) 16 May 1989** **- GB 651250 A (STANDARD OIL DEV CO) 14 March 1951** **Examiner: Abdallah Ibrahim AL-Khatib**

[54] PROCESS FOR THE CONVERSION OF SYNTHESIS GAS TO OXYGENATES

[57] Abstract: The present invention relates to an improved process for the conversion of carbon oxide(s) and hydrogen containing feedstocks to oxygen containing hydrocarbon compounds in the presence of a particulate catalyst. In particular, the present invention relates to an improved process for the conversion of carbon oxide(s) (CO and CO2) and hydrogen containing feedstocks, e.g. synthesis gas or syngas, to alcohols in the presence of a particulate modified molybdenum sulphide based catalyst and/or a modified methanol based catalyst and/or a modified Fischer-Tropsch catalyst and/or a precious metal based catalyst (e.g. rhodium).

No. of claims: 13

Note: Any interested individual may, within 3 months of publication of the grant, file objection thereof with the Grievance Committee after payment of grievance fees.

(19) pATENT OFFICE OF THE COOPERATION COUNCL FOR THE ARAB STATES OF THE GULF

(19) مكتب براءات الاختراع لمجلس التعاون لدول الخليج العربية

[12] **Patent**

[11] Patent No.: GC0001797 **[45] Date of Publishing the Grant of the Patent: 31/03/2012 17/2012**	**Number of the Decision to Grant the Patent: 11/26759** **Date of the Decision to Grant the Patent: 11/09/2011**
[21] Application No.: GCC/P/2007/8493 **[22] Filing Date: 12/06/2007** **[30] Priority:** **[31] Priority No. [32] Priority date [33] State** **20062776 2006/6/14 NO** **[72] Inventors: 1- Lorentsen, Odd-Arne، 2- Rosenkilde, Christian، 3- Hagen, Eirik، 4- Dring, Kevin** **[73] Owner: Norsk Titanium Technology AS, Sommerrogaten 13-15, N-0255 Oslo, Norway** **[74] Agent: Suleiman I. Al-Ammar**	**[51] Int. Cl.[7]: C22B 34/12, 34/00, 14/00; C25C 3/00, 3/28** **[56] Cited Documents:** **- WO2006/027612 A2(UNIV. CAMBRIDGE TECH. SERVICES LTD. et al.) 16 March 2006** **- US2004060826 A1(QINETIQ LTD. et al.) 01 April 2004** **Examiner: Abdallah Ibrahim AL-Khatib**

[54] METHOD, APPARATUS AND MEANS FOR PRODUCTION OF METALS IN A MOLTEN SALT ELECTROLYTE

[57] Abstract: This invention describes a method of producing a metal, M1, in an electrolytic cell consisting of a molten electrolyte, MzY - MzO, at least one anode and at least one cathode, characterised in that the passage of current between said anode(s) and cathode(s) through said electrolyte, produces a metal, M1, from a raw material, M1X, containing a non-metallic species, X, under conditions such that the potential at the cathode causes the reduction of the Mz cation and the formation of M2 at activities less than one, and the potential at the cathode is insufficient to cause formation of Mz metal as a discrete solid or liquid phase, and the Mz so produced reduces the raw material, M1X, at the cathode, to M1.

No. of claims: 15 No. of figures: 10

Figures

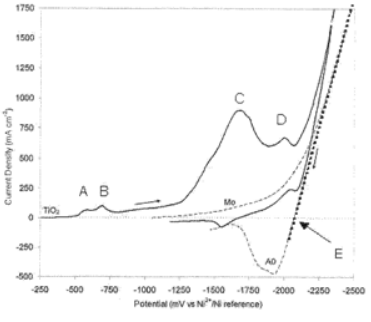

Note: Any interested individual may, within 3 months of publication of the grant, file objection thereof with the Grievance Committee after payment of grievance fees.

(19) pATENT OFFICE OF THE COOPERATION COUNCL FOR THE ARAB STATES OF THE GULF

(19) مكتب براءات الاختراع لمجلس التعاون لدول الخليج العربية

[12] Patent

[11] Patent No.: GC0001798 **[45] Date of Publishing the Grant of the Patent: 31/03/2012 17/2012**	**Number of the Decision to Grant the Patent: 11/26773** **Date of the Decision to Grant the Patent: 11/09/2011**
[21] Application No.: GCC/P/2008/10925 **[22] Filing Date: 31/05/2008** **[30] Priority:** **[31] Priority No. [32] Priority date [33] State** **2522402 01/06/2007 Ep** **[72] Inventors: 1- Carrington-Smith, Emma Louise، 2- Law, David John، 3- Pringle, Paul Gerard، 4- Sunley, John Glenn** **[73] Owner: BP Chemicals Limited, Chertsey road, Sunbury-on-Thames, TW 16 7BP, Middlesex, United Kingdom** **[74] Agent: Suleiman I. Al-Ammar**	**[51] Int. Cl.[7]: C07C 51/12, 53/08** **[56] Cited Documents:** **- WO 2004/101487 A (BP CHEM INT LTD [GB]; GAEMERS SANDER [GB]; SUNLEY JOHN GLENN [GB]) 25 November 2004** **- WO 2004/101488 A (BP CHEM INT LTD [GB]; GAEMERS SANDER [GB]; SUNLEY JOHN GLENN [GB]) 25 November 2004** **Examiner: Abdallah Ibrahim AL-Khatib**

[54] CARBONYLATION PROCESS FOR THE PRODUCTION OF ACETIC ACID USING METAL-PINCER LIGAND CATALYSTS

[57] Abstract: A process for the production of acetic acid by the liquid phase carbonylation of an alcohol and/or a reactive derivative thereof in which there is employed a catalyst comprising a complex of rhodium or iridium with a pincer ligand.

No. of claims: 60

Note: Any interested individual may, within 3 months of publication of the grant, file objection thereof with the Grievance Committee after payment of grievance fees.

(19) pATENT OFFICE OF THE COOPERATION COUNCL FOR THE ARAB STATES OF THE GULF

(19) مكتب براءات الاختراع لمجلس التعاون لدول الخليج العربية

[12] **Patent**

[11] Patent No.: GC0001799 **[45] Date of Publishing the Grant of the Patent: 31/03/2012 17/2012**	**Number of the Decision to Grant the Patent: 11/27665** **Date of the Decision to Grant the Patent: 21/09/2011**
[21] Application No.: GCC/P/2006/7271 **[22] Filing Date: 26/11/2006** **[30] Priority:** **[31] Priority No. [32] Priority date [33] State** **05111364.5 28/11/2005 EP**	**[51] Int. Cl.[7]: E21B 43/34** **[56] Cited Documents:** **- GB 2369787 A (KVAERNER OIL & GAS LTD.) 12 June 2002** **- US 4160652 A (TEXAS EASTERN ENG LTD) 10 July 1979** **- US 4233154 A (KOBE STEEL LTD.) 11 November 1980** **- US 2873814 A (NAT TANK CO.) 17 February 1959**
[72] Inventors: 1- Eduard Coenraad Bras، 2- Cornelis Buijs، 3- Jill Hui Chiun Chieng، 4- Robert Klein Nagelvoort **[73] Owner: Shell Internationale Research Maatschappij B. V. Carel van Bylandtlaan 30, 2596 HR, The Hauge, The Netherlands** **[74] Agent: Suleiman I. Al-Ammar**	**Examiner: Abdallah Ibrahim AL-Khatib**

[54] A METHOD FOR RECEIVING FLUID FROM A NATURAL GAS PIPELINE

[57] Abstract: A method for receiving fluid from a natural gas pipeline, the fluid comprising gaseous hydrocarbons, liquid hydrocarbons, water and optionally solids, the method comprising:

(a) in a slug catcher, receiving the fluid comprising gaseous hydrocarbons, liquid hydrocarbons, water and optionally solids from at least one pipeline;

(b) in the slug catcher, separating at least a portion of the gaseous hydrocarbons from the rest of the fluid to leave a liquid mixture or a liquid/ solid mixture;

(c) directing at least a portion of the liquid mixture or liquid/solid mixture to a separation vessel, preferably a three-phase separation vessel; and

(d) in the event of a surge of liquids and optionally solids to the slug catcher, directing at least a portion of the liquid mixture or the liquid/solid mixture from the slug catcher to a surge vessel.

No. of claims: 20 No. of figures: 1

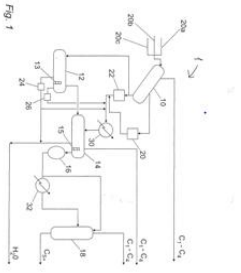

Note: Any interested individual may, within 3 months of publication of the grant, file objection thereof with the Grievance Committee after payment of grievance fees.

(19) pATENT OFFICE OF THE COOPERATION COUNCL FOR THE ARAB STATES OF THE GULF

(19) مكتب براءات الاختراع لمجلس التعاون لدول الخليج العربية

[12] **Patent**

[11] Patent No.: GC0001800 **[45] Date of Publishing the Grant of the Patent: 31/03/2012 17/2012**	**Number of the Decision to Grant the Patent: 11/26870** **Date of the Decision to Grant the Patent: 11/09/2011**
[21] Application No.: GCC/P/2002/2105 **[22] Filing Date: 26/06/2002** **[30] Priority:** **[31] Priority No. [32] Priority date [33] State** **60/301,250 28/06/2001 US** **01115807.8 28/06/2001 EP** **[72] Inventors: 1- Fanara Domenico، 2- Guichaux Anthony، 3- Berwaer Monique، 4- Deleers Michel** **[73] Owner: Glaxo Smithkline Trading Services Limited. 6900 Cork Airport Business Park, Kinsale Road, Cork, Ireland** **[74] Agent: Suleiman I. Al-Ammar**	**[51] Int. Cl.[7]: A61K 9/20, 31/495** **[56] Cited Documents:** **- EP 0811374 A (PFIZER) 10 December 1997** **- WO 9841194 A (BERWAER MONIQUE; BOUQUELLE ANNE (BE); DELEERS MICHEL (BE); FANARA) 24 September 1998** **Examiner: Fahed Zoaid AlMutairi**

[54] TABLET COMPRISING CETIRIZINE AND PSEUDOEPHEDRINE

[57] Abstract: The present invention concerns a table comprising two distinct segments. More particularly the invention relates to combination of tow pharmaceutical substances and methods of treatment of allergic disorders.

No. of claims: 37

Note: Any interested individual may, within 3 months of publication of the grant, file objection thereof with the Grievance Committee after payment of grievance fees.

(19) pATENT OFFICE OF THE COOPERATION COUNCL FOR THE ARAB STATES OF THE GULF

(19) مكتب براءات الاختراع لمجلس التعاون لدول الخليج العربية

[12] **Patent**

[11] Patent No.: GC0001801 **[45] Date of Publishing the Grant of the Patent: 31/03/2012 17/2012**	**Number of the Decision to Grant the Patent: 11/26816** **Date of the Decision to Grant the Patent: 11/09/2011**
[21] Application No.: GCC/P/2006/6815 **[22] Filing Date: 26/08/2006** **[30] Priority:** **[31] Priority No. [32] Priority date [33] State** **711,454/60 26/08/2005 US**	**[51] Int. CI.[7]: C07K 16/28, C12N 15/13, C12N5/10, A61K 39/395, A61P 35/00** **[56] Cited Documents:** **- WO 2005044859 A2 (GLYCART BIOTECHNOLOGY AG) 19 May 2005** **- WO 03/024388 A (CORNELL RES FOUNDATION INC [US]) 27 March 2003** **- WO 2005/044859 A (GLYCART BIOTECHNOLOGY AG [CH]; UMANA PABLO [CH]; BRUENKER PETER [CH];) 19 May 2005**
[72] Inventors: 1- Ekkehard Mossner، 2- Pablo Umana **[73] Owner: GlycArt Biotechnology AG, Wagistrasse 18, CH-8952, Schlieren- Zurich, Switzerland** **[74] Agent: Nassir Ali Kadasa**	**Examiner: NOUF SALEH ALNASSBAN**

[54] MODIFIED ANTIGEN BINDING MOLCULES WITH ALTERED CELL SIGNALING ACTIVITY

[57] Abstract: The present invention relates to modified antigen binding molecules (ABMs). In particular embodiments, the present invention relates to recombinant monoclonal antibodies or fragments, including chimeric, primatized or humanized antibodies or fragments, having altered ability to mediate cell signaling activity by a target antigen, and/or altered ability to mediate cross-linking of one or more target antigens. In addition, the present invention relates to nucleic acid molecules encoding such modfied ABMs, and vectors and host cells comprising such nucleic acid

Note: Any interested individual may, within 3 months of publication of the grant, file objection thereof with the Grievance Committee after payment of grievance fees.

(19) pATENT OFFICE OF THE COOPERATION COUNCL FOR THE ARAB STATES OF THE GULF

(19) مكتب براءات الاختراع لمجلس التعاون لدول الخليج العربية

[12] **Patent**

[11] Patent No.: GC0001802 **[45] Date of Publishing the Grant of the Patent: 31/03/2012 17/2012**	**Number of the Decision to Grant the Patent: 11/26796** **Date of the Decision to Grant the Patent: 11/09/2011**
[21] Application No.: GCC/P/2007/8588 **[22] Filing Date: 26/06/2007** **[30] Priority:** **[31] Priority No. [32] Priority date [33] State** **102006029790.3 27/06/2006 DE** **60/816.592 27/06/2006 US** **[72] Inventors: 1- Martin Dieterle، 2- Claus Hechler، 3- Wilhelm Ruppel، 4- Catharina Klanner، 5- Klaus Joachim Muller-Engel، 6- Gotz-Peter Schindler، 7- Hans-Jurgen Bassler، 8- Karl-Heinrich Klappert** **[73] Owner: Basf Aktiengesellschaft, 67056 Ludwigshafen, Germany** **[74] Agent: Nassir Ali Kadasa**	**[51] Int. Cl.[7]: B32B 15/01; B01J 19/02; C07C 5/333, 5/00** **[56] Cited Documents:** **- EP 0683760 A (CHEVRON CHEM CO [US]) 29 November 1995** **- US 6241953 B1 (KRIJGSMAN PIETER [NL]) 05 June 2001** **- DE 3522646 A1 (WIEDERAUF ARBEITUNG VON KERNBRE [DE]) 08 January 1987** **- US 2003/044334 A1 (KADOWAKI MASATAKA [JP] et al.) 06 March 2003** **Examiner: Abdallah Ibrahim AL-Khatib**

[54] PROCESS FOR CONTINUOUS HETEROGENEOUSLY CATALYZED PARTIAL DEHYDROGENATION OF AT LEAST ONE HYDROCARBON TO BE DEHYDROGENATED

[57] Abstract: A process for continuous heterogeneously catalyzed partial dehydrogenation of at least one hydrocarbon to be dehydrogenated in a reactor which is manufactured from a composite material which consists, on its side in contact with the reaction chamber, of a steel B with specific elemental composition which, on its side facing away from the reaction chamber, either directly or via an intermediate layer of copper, or of nickel, or of copper and nickel, is plated onto a steel A with specific elemental composition, and also partial oxidations of the dehydrogenated hydrocarbon and the reactor itself.

No. of claims: 66

Note: Any interested individual may, within 3 months of publication of the grant, file objection thereof with the Grievance Committee after payment of grievance fees.

(19) pATENT OFFICE OF THE COOPERATION COUNCL FOR THE ARAB STATES OF THE GULF

(19) مكتب براءات الاختراع لمجلس التعاون لدول الخليج العربية

[12] **Patent**

[11] Patent No.: GC0001803 **[45] Date of Publishing the Grant of the Patent: 31/03/2012 17/2012**	**Number of the Decision to Grant the Patent: 11/24569** **Date of the Decision to Grant the Patent: 07/06/2011**
[21] Application No.: GCC/P/2006/7290 **[22] Filing Date: 28/11/2006** **[72] Inventor: Hamed Saleh Sultan Al- Harthy** **[73] Owner: Hamed Saleh Sultan Al- Harthy, Masqat, Oman**	**[51] Int. Cl.[7]: A47B 43/04; A01M 13/00** **[56] Cited Documents:** **- US 5071003 A (RICHARDS HOMEWARES INC) 10 December 1991** **Examiner: Fahad M. al-Baker**

[54] FOLDABLE CUPBOARD FUMIGATEFOR CLOTHS FUMIGATIN

[57] Abstract: Installation Burner apparatus for steaming clothes folding for use in particular In the fumigation of clothing consisting of: an exoskeleton, which is a set of metal rods, light and powerful, including two disks metal clusters form in diameter each (35 cm) almost as well as the wheel mucus from the cloth of others to take the form of a cylindrical shape in and around the front slot rectangular used to insert and remove the garment from which you make the process of evaporation are installed the wheel and a set of bars, including disks which are part of structure in what appears in cupboards then installed Almjmr electric wrong wheel which is divided into two parts, the lower containing the receptors of the energy (electricity) and it goes out the wire, which provide him with energy (electricity) and the upper part is a lid (cover the bottom of the coke) surmounted by a part cylindrical in the middle slot (nozzle) pour barrel cover the lower part of coke a way that allows the passage of smoke (the smoke of incense). Through the top from under the base of close cupboard through a hole surrounded by a circular plastic ring and/ or other material resistant to heat and cracking in the middle portion thereby allowing the cover above the lower part of the coke (crater) Enter through in a situation where part of it inside the opaque cloth cupboard, along with the smoke (incense) and for clearing the smoke (incense) of the bug passes through the filter, which is installed above the carter it will hold the bug inside while the smoke (incense) refinery. Which carries with it scents come across do away with small to fill the inner the cloth of cupboard which work to limit the smoke (the smoke of incense refined), where the clothes hanging inside able to absorb and effectively rule aromatic produced by burning incense and thanks to the advantages of the relationships used in the suspension i\used in the dress in the cupboard first run on the integrity of the garment During a process of evaporation and the second to open the garment from the inside (the events of space) the center of the garment evaporator which increases the effectiveness of the performance in the evaporation through the penetration of scents to all parts of the garment evaporator.

No. of claims: 9 No. of figures: 12

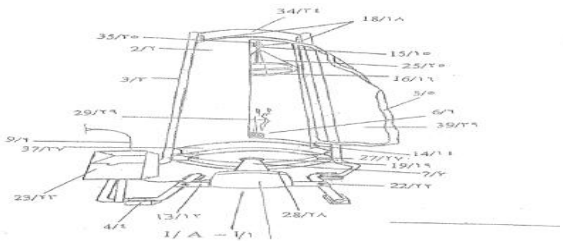

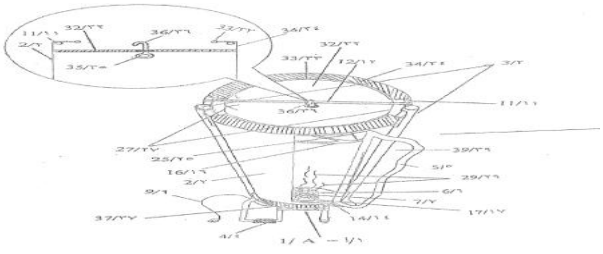

Note: Any interested individual may, within 3 months of publication of the grant, file objection thereof with the Grievance Committee after payment of grievance fees.

(19) pATENT OFFICE OF THE COOPERATION COUNCL FOR THE ARAB STATES OF THE GULF

(19) مكتب براءات الاختراع لمجلس التعاون لدول الخليج العربية

[12] **Patent**

[11] Patent No.: GC0001804 **[45] Date of Publishing the Grant of the Patent: 31/03/2012 17/2012**	**Number of the Decision to Grant the Patent: 11/27869** **Date of the Decision to Grant the Patent: 28/09/2011**
[21] Application No.: GCC/P/2000/597 **[22] Filing Date: 04/01/2000** **[30] Priority:** **[31] Priority No. [32] Priority date [33] State** **97420090.9 16/06/1997 EP** **9607712 17/06/1996 France** **[72] Inventors: 1- Pierre Marcelline، 2- Olivier Bonnardel** **[73] Owner: Aluminium Pechiney, 7 Place chance lear Adenauer, Cedex 75218 , Paris, France** **[74] Agent: Suleiman I. Al-Ammar**	**[51] Int. Cl.[7]: C25C 3/20, 3/06** **[56] Cited Documents:** **- FR 2749858 B1 (BONNARDEL OLIVIER) 24 July 1998** **- EP 0814181 (BONNARDEL, OLIVIER) 29 December 1998** **Examiner: Fahad M. al-Baker**

[54] PROCESS FOR CONTROLLING THE ALUMINA CONTENT OF THE BATH IN ELECTROLYSIS CELLS FOR ALUMINUM PRODUCTION

[57] Abstract: A process for control of the alumina content of the bath in a cell for production of aluminum by electrolysis of alumina dissolved in a molten cryolite-base salt, consisting of alternation of phases of alumina underfeeding and phases of alumina overfeeding compared with a theoretical mean rate of alumina consumption of the cell, the said alternation being a function of values, calculated at the end of each control cycle i of duration T, of the mean resistance R(i) measured at the cell electrode terminals, of the rate of change of this resistance or resistance slope P(i), of the rate of change of the resistance slope or curvature C(i) and of the extrapolated slope PX(i) = P(i) + C(i) × T, these values being compared respectively with reference values Po, Co and PXo in order to modulate, according to an appropriate control algorithm, the alumina content of the bath in a very narrow concentration range between 1.5 and 3.5%.

No. of claims: 20 No. of figures: 3

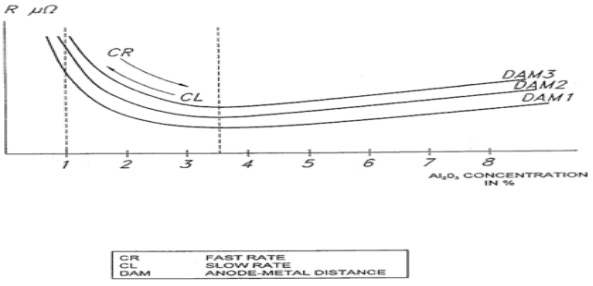

Note: Any interested individual may, within 3 months of publication of the grant, file objection thereof with the Grievance Committee after payment of grievance fees.

(19) pATENT OFFICE OF THE COOPERATION COUNCL FOR THE ARAB STATES OF THE GULF

(19) مكتب براءات الاختراع لمجلس التعاون لدول الخليج العربية

[12] **Patent**

[11] Patent No.: GC0001805 **[45] Date of Publishing the Grant of the Patent: 31/03/2012 17/2012**	**Number of the Decision to Grant the Patent: 11/27876** **Date of the Decision to Grant the Patent: 28/09/2011**
[21] Application No.: GCC/P/2004/3696 **[22] Filing Date: 04/08/2004** **[72] Inventors: 1- Guillard, Alain،** **2- Schmidt, Emmanuel** **[73] Owner: L Air Liquide, Societe anonyme a Directoire et Conseil de Surveillance Pour L Etude et LExploitation des Procedes Georges Claude, 75 Quai D Orsay, 75321 Paris Cedex 07, France** **[74] Agent: Suleiman I. Al-Ammar**	**[51] Int. CI.[7] : C07C 43/04, 41/01** **[56] Cited Documents:** **- 3920717 A (TEXACO DEVELOPMENT CORPORATION) 18 November 1975** **Examiner: Abdulaziz S. AL-Motek**

[54] PROCESS AND APPARATUS FOR THE PRODUCTION OF DIMETHYL ETHER

[57] **Abstract: In a process for the use of 8 hydrocarbon feedstock (10) by reacting the feedstock in a reactor (11) with oxygen {9} to form a synthesis gas containing at least carbon monoxide, earl:-on dioxide and hydrogen am: subjecting the synthesis gas to El conversion process comprising an exothermic reaction to produce dimethyl ether in a converter (15), the converter operating at an operating pressure, said oxygen being provided is the reactor at an oxygen pressure, the synthesis gas is produced at a pressure higher than the operating pressure of the converter.**

No. of claims: 15 **No. of figures: 1**

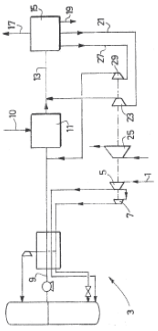

Note: Any interested individual may, within 3 months of publication of the grant, file objection thereof with the Grievance Committee after payment of grievance fees.

(19) pATENT OFFICE OF THE COOPERATION COUNCL FOR THE ARAB STATES OF THE GULF

(19) مكتب براءات الاختراع لمجلس التعاون لدول الخليج العربية

[12] **Patent**

[11] Patent No.: GC0001806 **[45] Date of Publishing the Grant of the Patent: 31/03/2012 17/2012**	**Number of the Decision to Grant the Patent: 11/27240** **Date of the Decision to Grant the Patent: 14/09/2011**
[21] Application No.: GCC/P/2005/5159 **[22] Filing Date: 14/09/2005** **[30] Priority:** **[31] Priority No. [32] Priority date [33] State** **60/610,475 16/09/2004 US** **11/161,809 17/08/2005 US** **[72] Inventors: 1- Lawrence Chou، 2- Paul A. Wand، 3- Dzevat Omeragic، 4- Peiwen Xia، 5- Jan W. Smits، 6- Qiming Li، 7- James F. Bristow،8- Jean Michel Denichou** **[73] Owner: Schlumberger Technology BV, Parkstraat 83-89, 2514 JG, The Hauge, The Netherlands** **[74] Agent: Suleiman I. Al-Ammar**	**[51] Int. Cl.[7]:G01V 1/34, 1/40** **[56] Cited Documents:** **- US 6078867A (PLUMB et al.) 20 January 2000** **- US 2004/0158997A1 (TANG) 19 August 2004** **- US 4092779A (STOKIC) 06 January 1978** **Examiner: Mohammed A. Aljaffar**

[54] METHODS FOR VISUALIZING DISTANCES BETWEEN WELLBORE AND FORMATION BOUNDARIES

[57] Abstract: A method for displaying a formation model includes displaying a trajectory representing a three-dimensional structure of the wellbore; and displaying objects representing a bed boundary along the trajectory, wherein the objects are displayed at distances from the trajectory according to measurement data, wherein the objects are displayed in orientations reflecting azimuth angles of planes corresponding to the bed boundary.

No. of claims: 11 No. of figures: 14

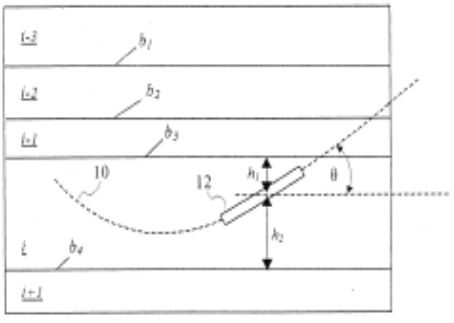

Note: Any interested individual may, within 3 months of publication of the grant, file objection thereof with the Grievance Committee after payment of grievance fees.

(19) pATENT OFFICE OF THE COOPERATION COUNCL FOR THE ARAB STATES OF THE GULF

(19) مكتب براءات الاختراع لمجلس التعاون لدول الخليج العربية

[12] **Patent**

[11] Patent No.: GC0001807 **[45] Date of Publishing the Grant of the Patent: 31/03/2012 17/2012**	**Number of the Decision to Grant the Patent: 11/27871** **Date of the Decision to Grant the Patent: 28/09/2011**
[21] Application No.: GCC/P/2006/6271 **[22] Filing Date: 17/05/2006** **[30] Priority:** **[31] Priority No. [32] Priority date [33] State** **11/132,773 19/5/2005 US** **[72] Inventors: 1- Jack E. Miller، 2- Charles Dale Calkins** **[73] Owner: TDW Delaware, Inc.Market 1100 Street,19801Delaware , 780Suite , Wilmington, USA** **[74] Agent: Suleiman I. Al-Ammar**	**[51] Int. Cl.[7]: F16L 55/16, 55/10** **[56] Cited Documents:** **- CN 1434910 A (GENOYER SA) 06 August 2003** **Examiner: Fahad M. al-Baker**

[54] HIGH TEMPERATURE COMPLETION PLUG

[57] Abstract: For use in closing a cylindrical passageway through a working member in which the passageway is defined in part by a reduced diameter internal circumferential sealing surface and an internal locking groove, a completion plug having a plug body with a cylindrical external surface receivable within the cylindrical passageway of the working member and having an external circumferential sealing surface dimensioned to radially compressibly engage the working member internal circumferential sealing surface. The plug body has on its cylindrical surface an external locking groove. A locking ring is received in the working member internal locking groove and simultaneously in the plug body external locking groove and serves to lock the plug body within the working member.

No. of claims: 12 No. of figures: 6

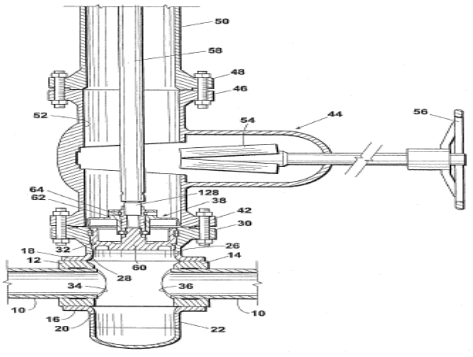

Note: Any interested individual may, within 3 months of publication of the grant, file objection thereof with the Grievance Committee after payment of grievance fees.

(19) pATENT OFFICE OF THE COOPERATION COUNCL FOR THE ARAB STATES OF THE GULF

(19) مكتب براءات الاختراع لمجلس التعاون لدول الخليج العربية

[12] **Patent**

[11] Patent No.: GC0001808 **[45] Date of Publishing the Grant of the Patent: 31/03/2012 17/2012**	**Number of the Decision to Grant the Patent: 11/27244** **Date of the Decision to Grant the Patent: 14/09/2011**
[21] Application No.: GCC/P/2007/7597 **[22] Filing Date: 13/01/2007** **[30] Priority:** **[31] Priority No. [32] Priority date [33] State** **11/332,736 13/01/2006 US** **[72] Inventors: 1- Bennett, Nicholas N.، 2- Omeragic, Dzevat، 3- Malinverno, Alberto، 4- Coates, Richard T.** **[73] Owner: Schlumberger Technology B.V., Parkstraat 83-89, 2514 JG, The Hauge, The Netherlands** **[74] Agent: Suleiman I. Al-Ammar**	**[51] Int. Cl.[7]: G01V 3/38; E21B 49/00** **[56] Cited Documents:** **- US 6984983B2 (SCHLUMBERGER TECHNOLOGY CORP) 10 January 2006** **- US 5461562A (SCHLUMBERGER TECHNOLOGY CORP) 24 October 1995** **- US 6950751B2 (CONOCOPHILLPS COMPANY) 27 September 2005** **Examiner: Mohammed A. Aljaffar**

[54] COMPUTER-BASED METHOD FOR WHILE-DRILLING MODELING AND VISUALIZATION OF LAYERED SUBTERRANEAN EARTH FORMATIONS

[57] Abstract: A computer-based method is provided for modeling and visualizing a property of a subterranean earth formation while drilling a borehole therethrough. The method gathers electromagnetic signals corresponding to a current measurement station location of a measuring-while-drilling tool, and generates a multilayer model corresponding to the signals. A histogram characterizing mode uncertainty is used to generate a set of color hue values which represent formation property predictions for depth values above and below the tool, and a set of saturation values which represent uncertainties for these predictions. A curtain plot is generated and displayed, employing colors to visualize the formation property predictions over successive measurement station locations. A new column of the curtain plot is generated for the current measurement station location. The color values of the new column are based upon the set of color hue values and the set of saturation values derived from the histogram. The saturation levels of the new column represent uncertainties for the corresponding predictions.

No. of claims: 25 No. of figures: 8

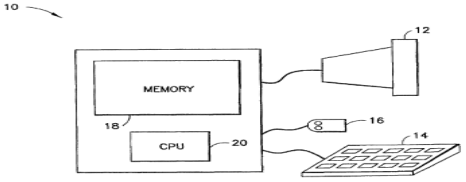

Note: Any interested individual may, within 3 months of publication of the grant, file objection thereof with the Grievance Committee after payment of grievance fees.

(19) pATENT OFFICE OF THE COOPERATION COUNCL FOR THE ARAB STATES OF THE GULF

(19) مكتب براءات الاختراع لمجلس التعاون لدول الخليج العربية

[12] **Patent**

[11] Patent No.: GC0001809 **[45] Date of Publishing the Grant of the Patent: 31/03/2012 17/2012**	**Number of the Decision to Grant the Patent: 11/26946** **Date of the Decision to Grant the Patent: 12/09/2011**
[21] Application No.: GCC/P/2004/4157 **[22] Filing Date: 22/12/2004** **[30] Priority:** **[31] Priority No. [32] Priority date [33] State** **10/743,500 22/12/2003 US** **[72] Inventors: 1- Cliff Robert Mure، 2- Karen Breetz، 3- Robert J. Jorgensen، 4- Guylaine St. Jean، 5- Stephen Paul Jaker** **[73] Owner: Union Carbide Chemicals & Plastics Technology LLC, 2020Dow Center, Midland, 48674, Michigan, USA** **[74] Agent: Saud M. A. Shawwaf**	**[51] Int. Cl.[7]: C08F 10/02, 110/02, C08F 4/22** **[56] Cited Documents:** **- US 5034364 A (KRAL et al.) 23 July 1991** **- US 6294500 B1 (DEBRAS GUY et al.) 25 September 2001** **Examiner: Bander M. Al-Thobity**

[54] BLOW MOLDING RESINS WITH IMPROVED ESCR

[57] Abstract: Polyethylene resins having improved environmental stress crack resistance, stiffness and impact resistance is made by a process comprising feeding both a chromium oxide catalyst and a silyl chromium catalyst into a polymerization reactor. The chromium oxide catalyst and the silyl chromium catalyst are on separate supports. The chromium oxide catalyst is 25-50 weight percent and the silyl chromium catalyst is 50-75 weight percent of the total weight of catalyst. The catalysts may be added separately or as a single mixture.

No. of claims: 32

Note: Any interested individual may, within 3 months of publication of the grant, file objection thereof with the Grievance Committee after payment of grievance fees.

(19) pATENT OFFICE OF THE COOPERATION COUNCL FOR THE ARAB STATES OF THE GULF

(19) مكتب براءات الاختراع لمجلس التعاون لدول الخليج العربية

[12] **Patent**

[11] Patent No.: GC0001810 **[45] Date of Publishing the Grant of the Patent: 31/03/2012 17/2012**	**Number of the Decision to Grant the Patent: 11/28544** **Date of the Decision to Grant the Patent: 20/10/2011**
[21] Application No.: GCC/P/2006/7178 **[22] Filing Date: 08/11/2006** **[30] Priority:** **[31] Priority No. [32] Priority date [33] State** **60/789,332 04/04/2006 US** **60/822,086 11/08/2006 US** **60/735,093 09/11/2005 US** **60/735,541 10/11/2005 US** **[72] Inventors: 1- Mahavir Prashad، 2- Bin Hu، 3- Yugang Liu، 4- Paul Allen Sutton، 5- Piotr Karpinski، 6- Sven Godtfredsen، 7- Lili Feng، 8- Michael J. Girgis** **[73] Owner: Novartis AG,35 Lichtstrasse, 4056 Basel, Switzerland** **[74] Agent: Saud M. A. Shawwaf**	**[51] Int. Cl.[7]:A61K 31/216** **[56] Cited Documents:** **- WO 03059345 A (NOVARTIS AG [CH]; NOVARTIS PHARMA GMBH [AT] 24 July 2003** **Examiner: Nada Moghil Albehaiji**

[54] COMPOUND FROM ANGIOTENSIN RECEPTOR AND NEPI USED FOR THE TREATMENT OF HIGH BLOOD PRESSURE AND HEART FAILURE

[57] Abstract: A specific combination, linked pro-drug or a compound of an angiotensin receptor antagonist and a NEPi are used in the treatment of hypertension.

No. of claims: 19 No. of figures: 1

Note: Any interested individual may, within 3 months of publication of the grant, file objection thereof with the Grievance Committee after payment of grievance fees.

(19) pATENT OFFICE OF THE COOPERATION COUNCL FOR THE ARAB STATES OF THE GULF

(19) مكتب براءات الاختراع لمجلس التعاون لدول الخليج العربية

[12] Patent

[11] Patent No.: GC0001811 [45] Date of Publishing the Grant of the Patent: 31/03/2012 17/2012	Number of the Decision to Grant the Patent: 11/28546 Date of the Decision to Grant the Patent: 20/10/2011
[21] Application No.: GCC/P/2006/7043 [22] Filing Date: 10/10/2006 [30] Priority: [31] Priority No. [32] Priority date [33] State 0521083.6 17/10/2005 GB [72] Inventors: 1- Acemoglu Murat، 2- Gottfried Sedelmeier، 3- Dominique Grimler [73] Owner: Novartis AG,Lichtstrasse 35 ,4056 , Basel, Switzerland [74] Agent: Saud M. A. Shawwaf	[51] Int. Cl.[7]:C07D 207/26 [56] Cited Documents: - AU 699616 B1 (NOVARTIS AG) 26 October 1995 - WO 2005051895 A1 (NOVARTIS PHARMA G.M.B.H., AUSTRIA; NOVARTIS A-G) 09 June 2005 Examiner: Nada Moghil Albehaiji

[54] C-8 LACTAM LACTONE COMPOUNDS AND METHOD FOR PREPARING IT

[57] Abstract: The invention related to a novel process, novel process steps and novel intermediates useful in the synthesis of pharmaceutically active compounds, especially renin inhibitors, such as Aliskiren. Inter alia, the invention relates to a process for the manufacture of a compound of the formula II, or a salt thereof, and a compound of formula Vl or a salt thereof, wherein R^3 and R^4 as well as Act are as defined in the specification, and processes of manufacturing these. Additionally transformation of compounds (Vl) with metallo organic compounds (VII) give rise to the new compounds (VMI) which are direct precursors for the preparation of Aliskiren.

No. of claims: 60 No. of figures: 2

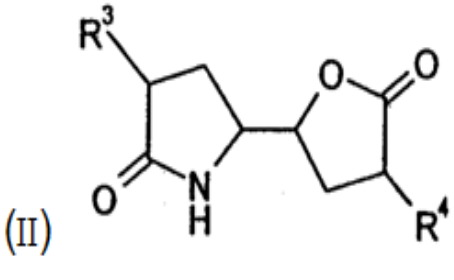

(II)

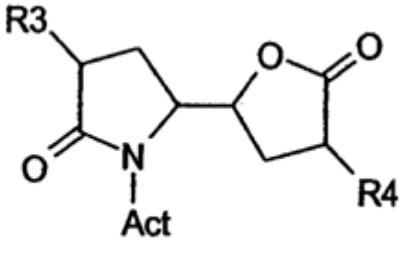

(VI)

Note: Any interested individual may, within 3 months of publication of the grant, file objection thereof with the Grievance Committee after payment of grievance fees.

(19) pATENT OFFICE OF THE COOPERATION COUNCL FOR THE ARAB STATES OF THE GULF

(19) مكتب براءات الاختراع لمجلس التعاون لدول الخليج العربية

[12] **Patent**

[11] Patent No.: GC0001812 **[45] Date of Publishing the Grant of the Patent: 31/03/2012 17/2012**	**Number of the Decision to Grant the Patent: 11/27881** **Date of the Decision to Grant the Patent: 28/09/2011**
[21] Application No.: GCC/P/2006/6989 **[22] Filing Date: 27/09/2006** **[30] Priority:** **[31] Priority No. [32] Priority date [33] State** **20060100444 27/07/2006 GR** **[72] Inventor: Tambakakis , Stefanos** **[73] Owner: Tambakakis , Stefanos , ‹59 ‹ ‹Chalandri -Greece ‹15233 ‹Epidavrou Street Attika.,Greece** **[74] Agent: Suleiman I. Al-Ammar**	**[51] Int. Cl.[7]:E04B 1/92, 2/90, 2/96** **[56] Cited Documents:** **- WO 2006/024214 A1 (DU,JUNHUA) 09 March 2006** **- US 4662135 A (YOSHIDA KOGYO K. K.) 05 May 1987** **Examiner: Fahad M. al-Baker**

[54] EARTHQUAKE RESISTANT CURTAIN WALLS WITH SUSPENDED GLASSED PANELS

[57] Abstract: Earthquake resistant curtain walls with Suspended Glassed Panels This invention refers to the production, fabrication and erection of curtain walls capable of resisting to the seismic forces of major earthquakes without breakage of their glass panes and without deformation or distortion of their structure The above can be achieved through the operational separation of the curtain wall of each storey from those of adjacent storeys, by formation of a sliding line on the top of the windows (2.3), through the mutual hooks of suspension of the windows (6.3, 6.10) so that the displacement of the one storey to be independent from the others. The structure of the curtain wall of each storey confined only to the fixed part of the curtain wall of the storey and consists of the uprights (3.1), the sill-beam (3.2), the lintel - beam (3.3) and the attachments (3.4). There are no uprights in the region of windows. The uprights of the structure of curtain wall of each storey at no case are touching the glass panels. The interstorey drifts (6) are in all directions absorbed by the suspension joints of the windows (7.5) and (7.6) and the specific angle profiles.

No. of claims: 7 No. of figures: 16

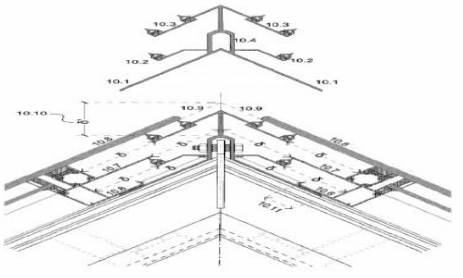

Note: Any interested individual may, within 3 months of publication of the grant, file objection thereof with the Grievance Committee after payment of grievance fees.

(19) pATENT OFFICE OF THE COOPERATION COUNCL FOR THE ARAB STATES OF THE GULF

(19) مكتب براءات الاختراع لمجلس التعاون لدول الخليج العربية

[12] Patent

[11] Patent No.: GC0001813 [45] Date of Publishing the Grant of the Patent: 31/03/2012 17/2012	Number of the Decision to Grant the Patent: 11/27879 Date of the Decision to Grant the Patent: 28/09/2011
[21] Application No.: GCC/P/2004/3530 [22] Filing Date: 05/06/2004 [30] Priority: [31] Priority No. [32] Priority date [33] State 10/456,212 06/06/2003 US [72] Inventor: Bruce Roger Debruin [73] Owner: Eastman Chemical Company, 100 North Eastman Road, Kingsport, Tennessee 37660, USA [74] Agent: Suleiman I. Al-Ammar	[51] Int. CI.[7]: C08F 2/00; B01F 5/10; B01J 19/18, 8/00; C08G 63/02, 63/78, 63/183, 63/199 [56] Cited Documents: - WO 0246266 A2 (EASTMAN CHEMICAL COMPANY) 13 June 2002 Examiner: Abdulaziz S. AL-Motek

[54] POLYESTER PROCESS USING A PIPE REACTOR

[57] Abstract: The invention is directed to polyester processes that utilizes a pipc reactor in the esterification, polycondensation, or both esterification and polycondensation processes. Pipe reactor processes of the present invention have a multitude of advantages over prior art processes including improved heat transfer, volume control, agitation and disengagement functions.

No. of claims: 20 No. of figures: 24

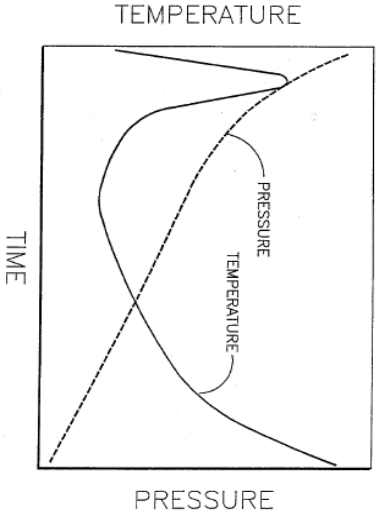

Note: Any interested individual may, within 3 months of publication of the grant, file objection thereof with the Grievance Committee after payment of grievance fees.

(19) pATENT OFFICE OF THE COOPERATION COUNCL FOR THE ARAB STATES OF THE GULF

(19) مكتب براءات الاختراع لمجلس التعاون لدول الخليج العربية

[12] **Patent**

[11] Patent No.: GC0001814 **[45] Date of Publishing the Grant of the Patent: 31/03/2012 17/2012**	**Number of the Decision to Grant the Patent: 11/27877** **Date of the Decision to Grant the Patent: 28/09/2011**
[21] Application No.: GCC/P/2004/3520 **[22] Filing Date: 02/06/2004** **[30] Priority:** **[31] Priority No. [32] Priority date [33] State** **10/455,016 05/06/2003 US** **[72] Inventor: Robert Lin** **[73] Owner: EASTMAN CHEMICAL COMPANY, 100 North Eastman Road, Kingsport, Tennessee 37660, USA** **[74] Agent: Suleiman I. Al-Ammar**	**[51] Int. Cl.[7]: C07C 51/42, 51/48** **[56] Cited Documents:** **- US 4356319 A (ROFFIA et al.) 26 October 1982** **- US 4939297 A (BROWDER et al.) 03 July 1990** **- EP 0181127 A2 (IMPERIAL CHEMICAL INDUSTRIES PLC) 14 May 1986** **- GB 1413829 A (STANDARD OIL COMPANY) 12 November 1975** **Examiner: Abdulaziz S. AL-Motek**

[54] EXTRACTION PROCESS FOR REMOVAL OF IMPURITIES FROM MOTHER LIQUOR IN THE SYNTHESIS OF CARBOXYLIC ACID

[57] Abstract: A method for removing impurities from a mother liquor comprising a carboxylic acid, a metal catalyst, impurities by (a) evaporating the mother liquor comprising a carboxylic acid, the metal catalyst, impurities, water and a solvent in a first evaporator zone to produce a vapor stream and a concentrated mother liquor strearm;(b) evaporating the concentrated mother liquor stream in a second evaporator zone to form a solvent rich stream and a super concentrated mother liquor stream;(c) separating organic impurities with a water-solvent solution from the super concentrated mother liquor in a solid-liquid separation zone to form an aqueous stream and a second aqueous stream; (d) mixing in a mixing zone water and optionally and extraction solvent with the aqueous stream and second aqueous stream to form an aqueous mixture; and (e) adding an extraction solvent to the aqueous mixture in an extraction zone to form an extract stream and a rafflnate stream.

No. of claims: 14 No. of figures: 1

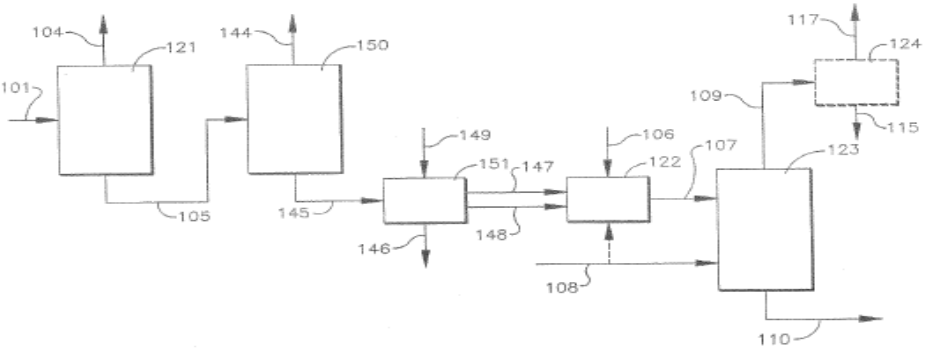

Note: Any interested individual may, within 3 months of publication of the grant, file objection thereof with the Grievance Committee after payment of grievance fees.

(19) pATENT OFFICE OF THE COOPERATION COUNCL FOR THE ARAB STATES OF THE GULF

(19) مكتب براءات الاختراع لمجلس التعاون لدول الخليج العربية

[12] **Patent**

[11] Patent No.: GC0001815 **[45] Date of Publishing the Grant of the Patent: 31/03/2012 17/2012**	**Number of the Decision to Grant the Patent: 11/27885** **Date of the Decision to Grant the Patent: 28/09/2011**
[21] Application No.: GCC/P/2005/5106 **[22] Filing Date: 03/09/2005** **[30] Priority:** **[31] Priority No. [32] Priority date [33] State** **04 12528 25/11/2004 FR** **[72] Inventors: 1- Morizot Jean-Claude، 2- Freitag Nicolas** **[73] Owner: Terre Armee Internationale,BIS VELIZY ،78140 ،1Rue DU PETIT CLAMART , France** **[74] Agent: Suleiman I. Al-Ammar**	**[51] Int. Cl.[7]: E02D 29/02** **[56] Cited Documents:** **- FR 2803610 A(FREYSSINET INTERNATIONAL) 13 July 2001** **Examiner: Fahad M. al-Baker**

[54] STABILIZED SOIL STRUCTURE AND FACING ELEMENTS FOR ITS CONSTRUCTION

[57] Abstract: The facing element for a stabilized soil structure comprises a body (4) of cast material inside which a path is formed for a reinforcement strip (2) between two points of emergence (6) situated on a rear face (7) of the element. This path includes two rectilinear portions (8) which are respectively adjacent to the two points of emergence and are each arranged so as to position the strip in the same plane of emergence perpendicular to the rear face, two curved portions (9) which respectively continue the two rectilinear portions and are arranged so as to deviate the strip from the plane of emergence, and a connection portion which joins the two curved portions to one another and has at least one loop (10) situated outside the plane of emergence.

No. of claims: 15 No. of figures: 7

Note: Any interested individual may, within 3 months of publication of the grant, file objection thereof with the Grievance Committee after payment of grievance fees.

(19) pATENT OFFICE OF THE COOPERATION COUNCL FOR THE ARAB STATES OF THE GULF

(19) مكتب براءات الاختراع لمجلس التعاون لدول الخليج العربية

[12] **Patent**

[11] Patent No.: GC0001816 **[45] Date of Publishing the Grant of the Patent: 31/03/2012 17/2012**	**Number of the Decision to Grant the Patent: 11/27878** **Date of the Decision to Grant the Patent: 28/09/201**
[21] Application No.: GCC/P/2004/3365 **[22] Filing Date: 07/04/2004** **[30] Priority:** **[31] Priority No. [32] Priority date [33] State** **60/460,901 07/04/2003 US** **[72] Inventors: 1- Marek Matusz، 2- Wayne Errol Evans** **[73] Owner: Shell Internationale Research Maatschappij B. V., Carel van Bylandtlaan 30, 2596 HR, The Hauge, The Netherlands** **[74] Agent: Suleiman I. Al-Ammar**	**[51] Int. Cl.[7]:C07D 301/10** **[56] Cited Documents:** **- GB 1191983 A (SOCIETA ITALIANA RESINE S.P.A) 13 May 1970** **- US 4766105 A (LAURITZEN ANN M) 23 August 1988** **- WO 01/96324 A (EVANS WAYNE ERROL; SHELL 0IL CO (US); CHIPMAN PETER INGRAHAM (US)) 20 December 2001** **- DATABASE BEILSTEIN BEILSTEIN INSTITUTE FOR ORGANIC CHEMISTRY, FRANKFURT-MAIN, DE; XP002296657 DATABASE ACCESSION No. 2768 (RID). & J. AM. CHEM. SOC., vol. 56, 1934** **Examiner: Abdulaziz S. AL-Motek**

[54] PROCESS FOR THE PRODUCTION OF AN OLEFIN OXIDE

[57] Abstract: A process for the production of an olefin oxide, which process comprises reacting a feed comprising an olefin and oxygen in the presence of a silver-containing catalyst, wherein before the catalyst has reached an advanced stage of ageing the reaction temperature is above 255℃ and the olefin content of the feed is above 25 mol-%, relative to the total feed.

No. of claims: 10

Note: Any interested individual may, within 3 months of publication of the grant, file objection thereof with the Grievance Committee after payment of grievance fees.

(19) pATENT OFFICE OF THE COOPERATION COUNCL FOR THE ARAB STATES OF THE GULF

(19) مكتب براءات الاختراع لمجلس التعاون لدول الخليج العربية

[12] **Patent**

[11] Patent No.: GC0001817 **[45] Date of Publishing the Grant of the Patent: 31/03/2012 17/2012**	**Number of the Decision to Grant the Patent: 11/28529** **Date of the Decision to Grant the Patent: 20/10/2011**
[21] Application No.: GCC/P/2006/7001 **[22] Filing Date: 30/09/2006** **[30] Priority:** **[31] Priority No. [32] Priority date [33] State** **60/722,796 30/09/2005 US** **60/836,886 09/08/2006 US** **[72] Inventors: 1- John Dolan، 2- Zhenhai Gao، 3- Cynthia M. Shaper، 4- X. Michael Wang، 5- Kristin Brinner، 6- Timothy D. Machajewski،7- Christopher Mcbride، 8- Maureen Mckenna، 9- Yasheen Zhou، 10- Kris Mendenhall،11- William Antonios-Mccrea،12- Baoqing Gong،13- Dan Gu، 14- Barry H. Levine، 15- John Tulinsky، 16- Brandon M.Doughan،17- Yi Xia، 18- Daniel Poon، 19- Paui A Barsanti، 20- Xiaodong،21- Abran Costales، 22- Alice Rico ،23- Nathan Brammeier، 24- Teresa Plck، 25- Paul Renhowe** **[73] Owner: Novartis Ag, 35 ,Lichstrasse ,4056 , Basel, Switzerland** **[74] Agent: Suleiman I. Al-Ammar**	**[51] Int. Cl.[7]: C07D 471/04** **[56] Cited Documents:** **- EP 0188094 A2 (MITSUT PETEROCHEMICAL IND [jp] 23 July 1986** **- EP 0192783 A1 (MITSUT PETEROCHEMICAL IND [jp] 03 September 1986** **- EP 0278742 A2 (MAY AND BAKER LTD UK) 17 August 1988** **Examiner: Nada Al-Behiji**

[54] 2-AMINO-7,8-DIHYDRO-6H-PYRIDO[4,3-D]PYRIMIDIN-5-ONES

[57] Abstract: Disclosed are 2-amino-7,8-dihydro-6H-pyrido[4,3-d]pyrimidin-5-one compounds, their stereoisomers, tautomers, pharmaceutically acceptable salts, and prodrugs thereof; compositions that include a pharmaceutically acceptable carrier and one or more of the 2-amino-7,8-dihydro-6H-pyrido[4,3-d]pyrimidin-5-one compounds , either alone or in combination with at least one additional therapeutic agent. Disclosed also are methods of using the 2-amino-7,8-dihydro-6H-pyrido [4,3-d] pyrimidin-5-one compounds, either alone or in combination with at least one additional therapeutic agent, in the prophylaxis or treatment of cellular proliferative, viral, autoimmune, cardiovascular, and central nevous system diseases.

No. of claims: 51

Note: Any interested individual may, within 3 months of publication of the grant, file objection thereof with the Grievance Committee after payment of grievance fees.

(19) pATENT OFFICE OF THE COOPERATION COUNCL FOR THE ARAB STATES OF THE GULF

(19) مكتب براءات الاختراع لمجلس التعاون لدول الخليج العربية

[12] **Patent**

[11] Patent No.: GC0001818 **[45] Date of Publishing the Grant of the Patent: 31/03/2012 17/2012**	**Number of the Decision to Grant the Patent: 11/28200** **Date of the Decision to Grant the Patent: 06/10/2011**
[21] Application No.: GCC/P/2006/5702 **[22] Filing Date: 21/01/2006** **[30] Priority:** **[31] Priority No. [32] Priority date [33] State** **0500579 20/01/2005 FR** **0500577 20/01/2005 FR** **[72] Inventors: 1- Dath Jean-Pierre، 2- Brun Claude، 3- Fremy Georges، 4- Humblot Françis، 5- Cholley Thierry** **[73] Owners: 1- Total Raffinage Marketing, 24 Cours Michelet, 92800, PUTEAUX, France ، 2- Ifp, Et 4 Avenue De Bois Preau 1, 92500, Rueil Malmaison, France** **[74] Agent: Suleiman I. Al-Ammar**	**[51] Int. CI.[7]: B01J 23/88, 23/94, 31/02, 37/20, 38/52; C10G 45/08** **[56] Cited Documents:** **- WO 2004091789 A1 (ATOFINA et al.) 28 October 2004** **- US6325920 B1 (ATOFINA et al.) 04 December 2001** **- EP0482817 A (SUMITOMO METAL MINING CO) 29 April 1992** **Examiner: Yahiya Naser Al-BuSafi**

[54] HYDROTREATMENT CATALYST, ITS METHOD OF PREPARATION AND ITS USE

[57] Abstract: The invention relates to a catalyst for the hydrotreatment of hydrocarbons, comprising a support consisting of at least one refractory oxide, at least one metal of group VIII and at least one metal of group 5 VIB, wherein it comprises in addition at least one organic compound of formula (I) or (II)

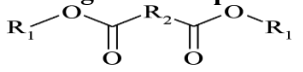

(I)

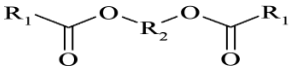

(II)

In which R_1 represents independently an alkyl group at 01-18, alkenyl at C2_18, aryl at C6-18, cycloalkyl at 03_8, alkylaryl or arylalkyl at C7-20, or the two R_1 groups form, jointly, a divalent group at C2_18, and R2 represents an alkylene group at C1_18, arylene at C6-18, cycloalkylene at C3-7, or a combination of these, a method of preparation of such a 15 catalyst and the use of the catalyst for hydrotreating or hydrocracking.

No. of claims: 24

Note: Any interested individual may, within 3 months of publication of the grant, file objection thereof with the Grievance Committee after payment of grievance fees.

(19) pATENT OFFICE OF THE COOPERATION COUNCL FOR THE ARAB STATES OF THE GULF

(19) مكتب براءات الاختراع لمجلس التعاون لدول الخليج العربية

[12] Patent

[11] Patent No.: GC0001819 [45] Date of Publishing the Grant of the Patent: 31/03/2012 17/2012	Number of the Decision to Grant the Patent: 11/27883 Date of the Decision to Grant the Patent: 28/09/2011
[21] Application No.: GCC/P/2008/11098 [22] Filing Date: 21/06/2008 [30] Priority: [31] Priority No. [32] Priority date [33] State 756921 03/08/2007 FR [72] Inventor: Gaussin, Christophe [73] Owner: Gaussin, Christophe,14 ,Rue Hector Berlioz ,90000 , Belfort, France [74] Agent: Suleiman I. Al-Ammar	[51] Int. Cl.[7]: B60P 1/64, 3/00, 3/42; B62D 21/02, 33/06; B65G 67/60 [56] Cited Documents: - US 5492402 A (ALTON REX [US]) 20 February 1996 - US 3392857 A (TANTLINGER KEITH W) 16 July 1968 Examiner: Fahad M. al-Baker

[54] MODULAR HEAVY TRANSPORT VEHICLE, IN PARTICULAR A PORT TRANSPORT VEHICLE

[57] Abstract: The invention concerns a modular heavy transport vehicle 1, in particular a port transport vehicle, comprising ground rolling means 2 designed so as to be driven by drive means 3. It is characterised in that said modular vehicle 1 comprises reception means designed to cooperate with complementary means for receiving functional modules for its fitting out, depending on the case, as self-propelled vehicle or as trailer, according to whether said rolling means 2 comprise or not drive means.

No. of claims: 10 No. of figures: 3

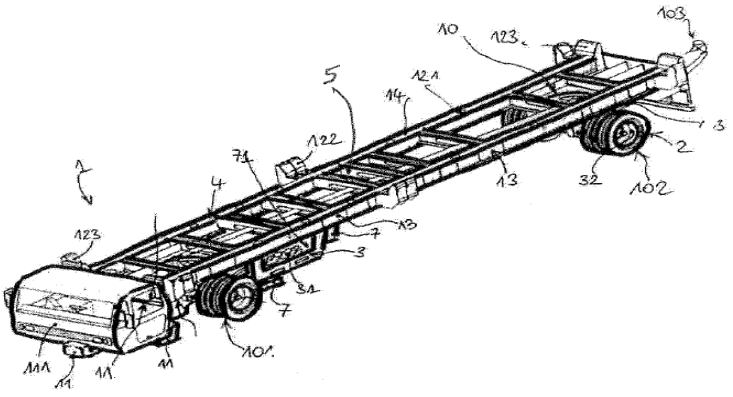

Note: Any interested individual may, within 3 months of publication of the grant, file objection thereof with the Grievance Committee after payment of grievance fees.

(19) pATENT OFFICE OF THE COOPERATION COUNCL FOR THE ARAB STATES OF THE GULF

(19) مكتب براءات الاختراع لمجلس التعاون لدول الخليج العربية

[12] Patent

[11] Patent No.: GC0001820 **[45] Date of Publishing the Grant of the Patent: 31/03/2012 17/2012**	**Number of the Decision to Grant the Patent: 11/27776** **Date of the Decision to Grant the Patent: 28/09/2011**
[21] Application No.: GCC/P/2006/7049 **[22] Filing Date: 10/10/2006** **[30] Priority:** **[31] Priority No. [32] Priority date [33] State** **5022820 19/10/2005 EP** **[72] Inventor: Oldrich Zaviska** **[73] Owner: Siemens Aktiengesellschaft, Wittelsbacherplatz 2, D-80333, Munich, Germany** **[74] Agent: Nassir Ali kadasa**	**[51] Int. Cl.[7]: G01K 17/20** **[56] Cited Documents:** **- US 6824305 B1 (BOYD RONALD D [US] et al.) 30 November 2004** **Examiner: Fahad M. al-Baker**

[54] VIRTUAL TEMPERATURE MEASURING POINT

[57] Abstract: The invention relates to a method for determining a temperature profile and the integral average temperature and/or axial temperature in a thick wall or shaft, the average integral wall temperature being calculated from the average temperature of each layer in a multilayer model for determining an average integral wall temperature during heating-up or cooling-down processes . For this purpose, a multilayer model based on the average temperature of each layer is used for determining the average integral wall temperature during heating-up or cooling-down processes.

No. of claims: 7 No. of figures: 6

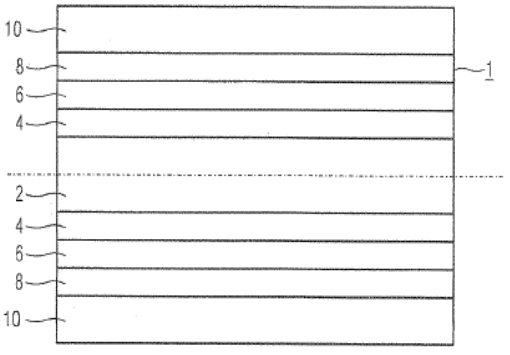

Note: Any interested individual may, within 3 months of publication of the grant, file objection thereof with the Grievance Committee after payment of grievance fees.

(19) pATENT OFFICE OF THE COOPERATION COUNCL FOR THE ARAB STATES OF THE GULF

(19) مكتب براءات الاختراع لمجلس التعاون لدول الخليج العربية

[12] **Patent**

[11] Patent No.: GC0001821 **[45] Date of Publishing the Grant of the Patent: 31/03/2012 17/2012**	**Number of the Decision to Grant the Patent: 11/25714** **Date of the Decision to Grant the Patent: 11/07/2011**
[21] Application No.: GCC/P/2006/5997 **[22] Filing Date: 25/03/2006** **[30] Priority:** **[31] Priority No. [32] Priority date [33] State** **05075740.0 30/03/2005 EP** **[72] Inventors: 1- Carolus Matthias Anna Maria Mesters، 2- Isaac Cornelis Van Den Born** **[73] Owner: Shell Internationale Research Maatschappij B. V., Carel van Bylandtlaan 30, 2596 HR, The Hauge, The Netherlands** **[74] Agent: Suleiman I. Al-Ammar**	**[51]Int. Cl.[7]: B01D 53/86, C01B 17/04** **[56] Cited Documents:** **- US 635259 (LEDOUX MARC et al.) 22 May 2001** **Examiner: Ahmed Saleem Al- Hinai**

[54] PROCESS FOR PRODUCING A GAS STREAM DEPLETED OF HYDROGEN SULPHIDE

[57] Abstract: The invention provides a process for producing a gas stream depleted of H2S from a feed gas stream comprising H2S, the process comprising the steps of:
(a) selectively oxidizing H2S by supplying the feed gas stream comprising H2S, an inert liquid medium and a molecular-oxygen comprising gas stream to a reaction zone comprising at least one catalytic zone comprising an oxidation catalyst and contacting the oxidation catalyst of each catalytic zone with the feed gas stream and/or the molecular-oxygen comprising gas stream in the presence of inert liquid medium at a temperature in the range of from 120 to 160°C to form elemental sulphur and the gas stream depleted of H2S, under such conditions that the elemental sulphur formed is essentially in liquid form and is removed from the reaction zone with inert liquid medium to obtain a liquid stream comprising inert liquid medium and essentially liquid elemental sulphur; (b) optionally separating the liquid stream obtained in step (a) into a first liquid phase enriched in inert liquid medium and a second liquid phase enriched in liquid elemental sulphur; (c) combusting at least part of the liquid stream obtained in step (a) or at least part of the second liquid phase obtained in step (b) to form a fluid stream comprising sulphur dioxide.

No. of claims: 9

Note: Any interested individual may, within 3 months of publication of the grant, file objection thereof with the Grievance Committee after payment of grievance fees.

(19) pATENT OFFICE OF THE COOPERATION COUNCL FOR THE ARAB STATES OF THE GULF

(19) مكتب براءات الاختراع لمجلس التعاون لدول الخليج العربية

[12] **Patent**

[11] Patent No.: GC0001822 **[45] Date of Publishing the Grant of the Patent: 31/03/2012 17/2012**	**Number of the Decision to Grant the Patent: 11/25267** **Date of the Decision to Grant the Patent: 26/06/2011**
[21] Application No.: GCC/P/2004/3446 **[22] Filing Date: 08/05/2004** **[30] Priority:** **[31] Priority No. [32] Priority date [33] State** **10260731.1 23/12/2002 Germany** **[72] Inventors: 1- Michael Stroder، 2- Martin Hirsch، 3- Peter Weber** **[73] Owner: Outokumpu Oyj, ، Riihitontuntie 7 FI -02200 Espoo , Finland** **[74] Agent: Saud M. A. Shawwaf**	**[51] Int. Cl.[7]: C22B; C21B; B01J; F27B** **[56] Cited Documents:** **- US 3578798A (BABCOCK & WILCOX CO) 18 May 1971** **- US 5505907A (AHLSTROEM CORP A et al.) 09 April 1996** **Examiner: Abdulaziz S. AL-Motek**

[54] METHOD AND PLANT FOR THE HEAT TREATMENT OF SOLIDS CONTAINING IRON OXIDE

[57] Abstract: A method for the heat treatment of solids containing iron oxide, in which fine-grained solids are heated to a temperature of about 630°C in a fluidized-bed reactor (1). To improve the utilization of energy, it is proposed to introduce a first gas or gas mixture from below through a supply tube (3) into a mixing chamber (7) of the reactor (1), the gas supply tube (3) being at least partly surrounded by a stationary annular fluidized bed (10) which is fluidized by supplying fluidizing gas. The gas velocities of the first gas or gas mixture and of the fluidizing gas for the annular fluidized bed (10) are adjusted such that the Particle-Froude-Numbers in the gas supply tube (3) are between 1 and 100, in the annular fluidized bed (10) between 0.02 and 2, and in the mixing chamber (7) between 0.3 and 30.

No. of claims: 17 No. of figures: 2

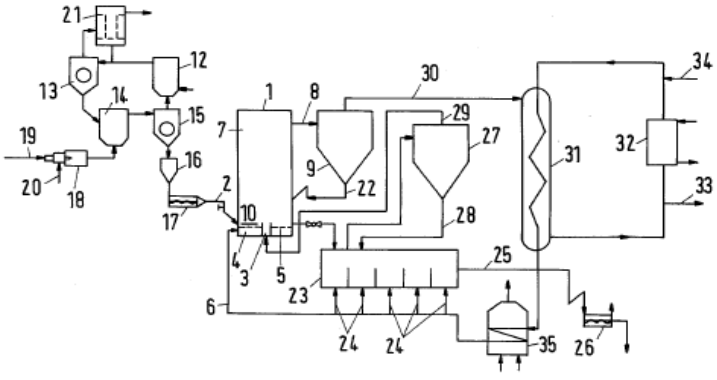

Note: Any interested individual may, within 3 months of publication of the grant, file objection thereof with the Grievance Committee after payment of grievance fees.

(19) pATENT OFFICE OF THE COOPERATION COUNCL FOR THE ARAB STATES OF THE GULF

(19) مكتب براءات الاختراع لمجلس التعاون لدول الخليج العربية

[12] **Patent**

[11] Patent No.: GC0001823 **[45] Date of Publishing the Grant of the Patent: 31/03/2012 17/2012**	**Number of the Decision to Grant the Patent: 11/25265** **Date of the Decision to Grant the Patent: 26/06/2011**
[21] Application No.: GCC/P/2004/3447 **[22] Filing Date: 08/05/2004** **[30] Priority:** **[31] Priority No. [32] Priority date [33] State** **10260733.8 23/12/2002 Germany** **[72] Inventors: 1- Andreas Orth، 2- Stuart Sneyd، 3- Dirk Nuber، 4- Martin Hirsch، 5- Michael Stroder، 6- Peter Weber** **[73] Owner: Outokumpu Oyj, 7Riihitontuntie FI -02200, Espoo , Finland** **[74] Agent: Saud M. A. Shawwaf**	**[51] Int. Cl.[7]: C22B; C21B; B01J; F27B** **[56] Cited Documents:** **- US 3578798A (BABCOCK & WILCOX CO) 18 May 1971** **- US 5505907A (AHLSTROEM CORP A et al.) 09 April 1996** **Examiner: Abdulaziz S. AL-Motek**

[54] METHOD AND PLANT FOR THE HEAT TREATMENT OF SOLIDS CONTAINING IRON OXIDE

[57] Abstract: The present invention relates to a method and a plant for the heat treatment of solids containing iron oxide, in which fine-grained solid are heated to a temperature of 700 to 1150° C in a fluidized bed reactor (8) . To improve the utilization of energy, it is pro-posed to introduce a first gas or gas mixture from below though at least one gas sup-ply tube (9) into a mixing chamber region (15) of the reactor (8), the gas supply tube (9) being at least partly surrounded by a stationary annular fluidized bed (12) which is fluid-ized by supplying fluidizing gas. The gas velocities of the first gas or gas mixture and of the fluidizing gas for the annular fluidized bed (12) are adjusted such that the particle-Froude-Numbers in the gas supply tube (9) are between 1 and 100, in the annular fluid-ized bed (12) between 0.02 and 2, and in the mixing chamber (15) between 0.3 and 30.

No. of claims: 27 No. of figures: 3

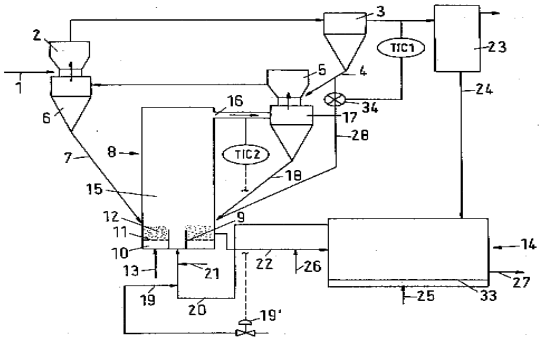

Note: Any interested individual may, within 3 months of publication of the grant, file objection thereof with the Grievance Committee after payment of grievance fees.

Lapsed Patents and Lapsed Patent Applications

List of Lapsed Patent Applications

From 01/07/2011 To 31/12/2011

Sr	Application No	Filing Date	Decision No	Decision Date
1	616	19/04/2000	25835/11	12/07/2011
2	1543	30/07/2001	28066/11	03/10/2011
3	1581	19/08/2001	27995/11	03/10/2011
4	1697	24/10/2001	29522/11	18/12/2011
5	1886	02/03/2002	28093/11	03/10/2011
6	1889	02/03/2002	28064/11	03/10/2011
7	1900	09/03/2002	28062/11	03/10/2011
8	1902	09/03/2002	28063/11	03/10/2011
9	1932	03/04/2002	28092/11	03/10/2011
10	1965	24/04/2002	28024/11	03/10/2011
11	2080	18/06/2002	28061/11	03/10/2011
12	2113	01/07/2002	28673/11	28/10/2011
13	2228	25/09/2002	28631/11	28/10/2011
14	2302	03/11/2002	28037/11	03/10/2011
15	2318	13/11/2002	26024/11	04/08/2011
16	2332	19/11/2002	27994/11	03/10/2011
17	2346	24/11/2002	28091/11	03/10/2011
18	2358	25/11/2002	26094/11	04/08/2011
19	2459	27/01/2003	26049/11	04/08/2011
20	2561	18/03/2003	26023/11	04/08/2011
21	2572	26/03/2003	26022/11	04/08/2011
22	2579	02/04/2003	26021/11	04/08/2011
23	2611	22/04/2003	26089/11	04/08/2011
24	2778	15/07/2003	28034/11	03/10/2011
25	2839	12/08/2003	26163/11	06/08/2011
26	2842	12/08/2003	28060/11	03/10/2011
27	2853	19/08/2003	28059/11	03/10/2011
28	2980	18/10/2003	26091/11	04/08/2011
29	3056	30/11/2003	26040/11	04/08/2011
30	3066	03/12/2003	26088/11	04/08/2011
31	3067	03/12/2003	26090/11	04/08/2011
32	3186	25/01/2004	28031/11	03/10/2011
33	3218	14/02/2004	28672/11	28/10/2011

Sr	Application No	Filing Date	Decision No	Decision Date
34	3371	10/04/2004	28696/11	28/10/2011
35	3487	23/05/2004	29556/11	18/12/2011
36	3513	31/05/2004	28023/11	03/10/2011
37	3918	20/10/2004	28229/11	11/10/2011
38	3928	23/10/2004	27309/11	14/09/2011
39	3954	30/10/2004	29141/11	04/12/2011
40	3955	30/10/2004	28676/11	28/10/2011
41	3956	30/10/2004	28633/11	28/10/2011
42	3971	02/11/2004	26092/11	04/08/2011
43	3972	02/11/2004	28686/11	28/10/2011
44	4008	20/11/2004	28687/11	28/10/2011
45	4013	21/11/2004	28689/11	28/10/2011
46	4032	27/11/2004	28688/11	28/10/2011
47	4085	14/12/2004	26145/11	05/08/2011
48	4170	28/12/2004	28632/11	28/10/2011
49	4171	28/12/2004	26065/11	04/08/2011
50	4172	28/12/2004	26064/11	04/08/2011
51	4425	04/05/2003	29541/11	18/12/2011
52	4502	02/04/2005	28027/11	03/10/2011
53	4521	06/04/2005	26164/11	06/08/2011
54	4616	04/05/2005	29052/11	04/12/2011
55	4617	04/05/2005	29070/11	04/12/2011
56	4635	07/05/2005	29063/11	04/12/2011
57	4636	07/05/2005	29062/11	04/12/2011
58	4637	07/05/2005	29061/11	04/12/2011
59	4642	11/05/2005	29060/11	04/12/2011
60	4643	11/05/2005	29059/11	04/12/2011
61	4697	23/05/2005	29356/11	10/12/2011
62	4706	25/05/2005	29058/11	04/12/2011
63	4731	01/06/2005	26069/11	04/08/2011
64	4732	01/06/2005	26068/11	04/08/2011
65	4839	26/06/2005	25660/11	06/07/2011
66	4843	27/06/2005	25662/11	06/07/2011

Sr	Application No	Filing Date	Decision No	Decision Date
67	4900	12/07/2005	25449/11	04/07/2011
68	4975	30/07/2005	25445/11	04/07/2011
69	5010	10/08/2005	25447/11	04/07/2011
70	5022	13/08/2005	28029/11	03/10/2011
71	5023	13/08/2005	28025/11	03/10/2011
72	5086	29/08/2005	29354/11	10/12/2011
73	5109	04/09/2005	25664/11	06/07/2011
74	5112	05/09/2005	29057/11	04/12/2011
75	5113	05/09/2005	29056/11	04/12/2011
76	5141	10/09/2005	29148/11	04/12/2011
77	5143	10/09/2005	29078/11	04/12/2011
78	5157	14/09/2005	29129/11	04/12/2011
79	5165	14/09/2005	29079/11	04/12/2011
80	5173	19/09/2005	29128/11	04/12/2011
81	5174	19/09/2005	29127/11	04/12/2011
82	5176	19/09/2005	29080/11	04/12/2011
83	5191	21/09/2005	29126/11	04/12/2011
84	5192	21/09/2005	29125/11	04/12/2011
85	5193	21/09/2005	29124/11	04/12/2011
86	5194	21/09/2005	29123/11	04/12/2011
87	5195	21/09/2005	29122/11	04/12/2011
88	5215	27/09/2005	29142/11	04/12/2011
89	5219	28/09/2005	29121/11	04/12/2011
90	5221	28/09/2005	29081/11	04/12/2011
91	5225	01/10/2005	29138/11	04/12/2011
92	5226	01/10/2005	29139/11	04/12/2011
93	5231	04/10/2005	29147/11	04/12/2011
94	5236	04/10/2005	29082/11	04/12/2011
95	5245	08/10/2005	29083/11	04/12/2011
96	5254	12/10/2005	29084/11	04/12/2011
97	5260	15/10/2005	29146/11	04/12/2011
98	5263	15/10/2005	29145/11	04/12/2011
99	5286	19/10/2005	29071/11	04/12/2011
100	5295	22/10/2005	29133/11	04/12/2011
101	5296	22/10/2005	29120/11	04/12/2011

Sr	Application No	Filing Date	Decision No	Decision Date
102	5342	08/11/2005	25666/11	06/07/2011
103	5343	08/11/2005	25665/11	06/07/2011
104	5374	15/11/2005	25667/11	06/07/2011
105	5402	19/11/2005	28675/11	28/10/2011
106	5403	19/11/2005	28674/11	28/10/2011
107	5492	10/12/2005	28189/11	05/10/2011
108	5554	19/12/2005	29830/11	20/12/2011
109	5588	21/12/2005	26080/11	04/08/2011
110	5651	02/01/2006	26081/11	04/08/2011
111	5669	04/01/2006	26162/11	06/08/2011
112	5891	28/02/2006	27540/11	18/09/2011
113	5899	01/03/2006	26160/11	06/08/2011
114	6027	01/04/2006	29086/11	04/12/2011
115	6038	03/04/2006	29130/11	04/12/2011
116	6039	03/04/2006	29131/11	04/12/2011
117	6089	11/04/2006	29087/11	04/12/2011
118	6093	11/04/2006	29359/11	10/12/2011
119	6122	19/04/2006	29132/11	04/12/2011
120	6131	22/04/2006	29088/11	04/12/2011
121	6132	22/04/2006	29089/11	04/12/2011
122	6137	22/04/2006	29140/11	04/12/2011
123	6470	03/04/2008	28090/11	03/10/2011
124	6471	03/04/2008	28089/11	03/10/2011
125	6547	10/07/2006	29090/11	04/12/2011
126	6607	19/07/2006	26161/11	06/08/2011
127	6726	05/08/2006	29091/11	04/12/2011
128	6806	23/08/2006	28188/11	05/10/2011
129	6912	13/09/2006	28941/11	01/11/2011
130	6927	17/09/2006	28655/11	28/10/2011
131	6966	25/09/2006	29092/11	04/12/2011
132	7016	04/10/2006	26082/11	04/08/2011
133	7096	28/10/2006	29093/11	04/12/2011
134	7116	28/10/2006	29094/11	04/12/2011
135	7180	08/11/2006	29095/11	04/12/2011
136	7215	15/11/2006	29073/11	04/12/2011

Sr	Application No	Filing Date	Decision No	Decision Date
137	7228	15/11/2006	25661/11	06/07/2011
138	7236	18/11/2006	29074/11	04/12/2011
139	7248	20/11/2006	25840/11	12/07/2011
140	7251	21/11/2006	29075/11	04/12/2011
141	7259	22/11/2006	29076/11	04/12/2011
142	7262	22/11/2006	29077/11	04/12/2011
143	7268	25/11/2006	25843/11	12/07/2011
144	7310	02/12/2006	27406/11	15/09/2011
145	7337	05/12/2006	26083/11	04/08/2011
146	7372	10/12/2006	25842/11	12/07/2011
147	7448	18/12/2006	26084/11	04/08/2011
148	7458	19/12/2006	25448/11	04/07/2011
149	7488	20/12/2006	25679/11	11/07/2011
150	7495	20/12/2006	29055/11	04/12/2011
151	7738	07/02/2007	25446/11	04/07/2011
152	7806	20/02/2007	25659/11	06/07/2011
153	7917	11/03/2007	25670/11	06/07/2011
154	8028	31/03/2007	25444/11	04/07/2011
155	8388	26/05/2007	25669/11	06/07/2011
156	8448	06/06/2007	25434/11	04/07/2011
157	8452	06/06/2007	26063/11	04/08/2011
158	8559	20/06/2007	26066/11	04/08/2011
159	8612	27/06/2007	29542/11	18/12/2011
160	8653	04/07/2007	26053/11	04/08/2011
161	8857	07/08/2007	29857/11	22/12/2011
162	8866	11/08/2007	26036/11	04/08/2011
163	8899	15/08/2007	26054/11	04/08/2011
164	8913	18/08/2007	29544/11	18/12/2011
165	8935	22/08/2007	29545/11	18/12/2011
166	8969	28/08/2007	29598/11	18/12/2011
167	8981	01/09/2007	29596/11	18/12/2011
168	8983	01/09/2007	29597/11	18/12/2011
169	9019	17/09/2007	26052/11	04/08/2011
170	9025	08/09/2007	29568/11	18/12/2011
171	9035	10/09/2007	29603/11	18/12/2011

Sr	Application No	Filing Date	Decision No	Decision Date
172	9169	26/09/2007	26042/11	04/08/2011
173	9179	29/09/2007	26112/11	04/08/2011
174	9190	03/04/2008	28088/11	03/10/2011
175	9198	02/10/2007	26048/11	04/08/2011
176	9242	20/10/2007	26050/11	04/08/2011
177	9259	20/10/2007	26113/11	04/08/2011
178	9280	20/10/2007	26114/11	04/08/2011
179	9287	20/10/2007	26115/11	04/08/2011
180	9289	20/10/2007	26111/11	04/08/2011
181	9296	20/10/2007	26031/11	04/08/2011
182	9302	20/10/2007	26030/11	04/08/2011
183	9305	20/10/2007	26047/11	04/08/2011
184	9307	20/10/2007	26043/11	04/08/2011
185	9308	20/10/2007	26046/11	04/08/2011
186	9351	27/10/2007	25435/11	04/07/2011
187	9530	21/11/2007	26542/11	14/08/2011
188	9573	28/11/2007	26554/11	15/08/2011
189	9645	08/12/2007	29589/11	18/12/2011
190	9801	29/12/2007	26051/11	04/08/2011
191	9809	29/12/2007	26070/11	04/08/2011
192	9888	02/01/2008	27992/11	03/10/2011
193	9891	02/01/2008	28193/11	05/10/2011
194	9914	08/01/2008	27991/11	03/10/2011
195	9961	16/01/2008	26027/11	04/08/2011
196	9965	16/01/2008	27990/11	03/10/2011
197	9985	19/01/2008	29599/11	18/12/2011
198	9992	20/01/2008	28058/11	03/10/2011
199	10036	28/01/2008	28192/11	05/10/2011
200	10040	29/01/2008	27988/11	03/10/2011
201	10056	30/01/2008	28055/11	03/10/2011
202	10087	04/02/2008	29600/11	18/12/2011
203	10089	04/02/2008	28054/11	03/10/2011
204	10119	06/02/2008	28640/11	28/10/2011
205	10138	11/02/2008	28660/11	28/10/2011
206	10148	03/04/2008	28187/11	05/10/2011

Sr	Application No	Filing Date	Decision No	Decision Date
207	10178	17/02/2008	27982/11	03/10/2011
208	10196	20/02/2008	29585/11	18/12/2011
209	10205	25/02/2008	26764/11	11/09/2011
210	10236	03/04/2008	28661/11	28/10/2011
211	10251	03/04/2008	28185/11	05/10/2011
212	10303	08/03/2008	28638/11	28/10/2011
213	10304	03/04/2008	28637/11	28/10/2011
214	10311	08/03/2008	27984/11	03/10/2011
215	10327	12/03/2008	26770/11	11/09/2011
216	10358	12/03/2008	28237/11	11/10/2011
217	10370	15/03/2008	28236/11	11/10/2011
218	10375	03/04/2008	27985/11	03/10/2011
219	10377	19/03/2008	28646/11	28/10/2011
220	10412	22/03/2008	28235/11	11/10/2011
221	10459	03/04/2008	28186/11	05/10/2011
222	10531	05/04/2008	28659/11	28/10/2011
223	10570	09/04/2008	28050/11	03/10/2011
224	10579	12/04/2008	26116/11	05/08/2011
225	10581	12/04/2008	26117/11	05/08/2011
226	10587	13/04/2008	28647/11	28/10/2011
227	10598	14/04/2008	28234/11	11/10/2011
228	10603	15/04/2008	28625/11	28/10/2011
229	10610	16/04/2008	28233/11	11/10/2011
230	10653	23/04/2008	28656/11	28/10/2011
231	10674	26/04/2008	28232/11	11/10/2011
232	10676	26/04/2008	28231/11	11/10/2011
233	10679	26/04/2008	28230/11	11/10/2011
234	10692	27/04/2008	28697/11	28/10/2011
235	10698	28/04/2008	26118/11	05/08/2011
236	10701	29/04/2008	26689/11	24/08/2011
237	10708	30/04/2008	28648/11	28/10/2011
238	10710	30/04/2008	26645/11	24/08/2011
239	10711	30/04/2008	25969/11	23/07/2011
240	10715	30/04/2008	26119/11	05/08/2011
241	10734	04/05/2008	28087/11	03/10/2011
242	10750	06/05/2008	28698/11	28/10/2011

Sr	Application No	Filing Date	Decision No	Decision Date
243	10760	07/05/2008	28628/11	28/10/2011
244	10763	07/05/2008	29355/11	10/12/2011
245	10788	11/05/2008	28649/11	28/10/2011
246	10789	11/05/2008	28650/11	28/10/2011
247	10810	14/05/2008	28257/11	11/10/2011
248	10820	14/05/2008	26120/11	05/08/2011
249	10833	17/05/2008	29539/11	18/12/2011
250	10876	21/05/2008	26078/11	04/08/2011
251	10902	28/05/2008	26038/11	04/08/2011
252	10903	28/05/2008	26037/11	04/08/2011
253	10908	28/05/2008	26690/11	24/08/2011
254	11015	11/06/2008	26132/11	05/08/2011
255	11017	11/06/2008	29262/11	10/12/2011
256	11018	11/06/2008	26131/11	05/08/2011
257	11021	11/06/2008	29263/11	10/12/2011
258	11036	14/06/2008	26774/11	11/09/2011
259	11049	14/06/2008	26130/11	05/08/2011
260	11050	14/06/2008	26129/11	05/08/2011
261	11051	14/06/2008	26128/11	05/08/2011
262	11054	14/06/2008	26127/11	05/08/2011
263	11061	15/06/2008	28953/11	01/11/2011
264	11079	17/06/2008	29110/11	04/12/2011
265	11086	18/06/2008	29185/11	05/12/2011
266	11088	18/06/2008	29100/11	04/12/2011
267	11092	21/06/2008	29296/11	10/12/2011
268	11125	23/06/2008	29528/11	18/12/2011
269	11135	25/06/2008	26126/11	05/08/2011
270	11136	25/06/2008	26125/11	05/08/2011
271	11141	25/06/2008	26124/11	05/08/2011
272	11143	25/06/2008	26123/11	05/08/2011
273	11157	25/06/2008	29516/11	18/12/2011
274	11174	28/06/2008	26122/11	05/08/2011
275	11273	09/07/2008	26106/11	04/08/2011
276	11325	19/07/2008	26556/11	15/08/2011
277	11372	23/07/2008	26546/11	15/08/2011
278	11373	23/07/2008	28253/11	11/10/2011

Sr	Application No	Filing Date	Decision No	Decision Date
279	11469	09/08/2008	28086/11	03/10/2011
280	11513	13/08/2008	27530/11	15/09/2011
281	11534	16/08/2008	27268/11	14/09/2011
282	11535	16/08/2008	26121/11	05/08/2011
283	11542	16/08/2008	28085/11	03/10/2011
284	11554	19/08/2008	26107/11	04/08/2011
285	11557	20/08/2008	26545/11	15/08/2011
286	11567	20/08/2008	25433/11	04/07/2011
287	11605	27/08/2008	27269/11	14/09/2011
288	11608	27/08/2008	27266/11	14/09/2011
289	11625	27/08/2008	26557/11	15/08/2011
290	11631	30/08/2008	27267/11	14/09/2011
291	11636	31/08/2008	26166/11	06/08/2011
292	11652	06/09/2008	26045/11	04/08/2011
293	11664	06/09/2008	26108/11	04/08/2011
294	11672	07/09/2008	27378/11	15/09/2011
295	11675	09/09/2008	28945/11	01/11/2011
296	11677	09/09/2008	28937/11	01/11/2011
297	11700	10/09/2008	28635/11	28/10/2011
298	11711	13/09/2008	27506/11	15/09/2011
299	11712	13/09/2008	28639/11	28/10/2011
300	11715	14/09/2008	28671/11	28/10/2011
301	11754	20/09/2008	27270/11	14/09/2011
302	11768	20/09/2008	28670/11	28/10/2011
303	11771	20/09/2008	28700/11	28/10/2011
304	11779	21/09/2008	28952/11	01/11/2011
305	11781	21/09/2008	28634/11	28/10/2011
306	11786	21/09/2008	28938/11	01/11/2011
307	11803	22/09/2008	28699/11	28/10/2011
308	11805	22/09/2008	28641/11	28/10/2011
309	11806	22/09/2008	28621/11	28/10/2011
310	11810	22/09/2008	28636/11	28/10/2011
311	11816	11/10/2008	26044/11	04/08/2011
312	11827	11/10/2008	28683/11	28/10/2011
313	11880	11/10/2008	28620/11	28/10/2011
314	11890	11/10/2008	26105/11	04/08/2011
315	11895	11/10/2008	28690/11	28/10/2011

Sr	Application No	Filing Date	Decision No	Decision Date
316	11922	14/10/2008	26028/11	04/08/2011
317	11934	15/10/2008	28701/11	28/10/2011
318	11946	18/10/2008	28657/11	28/10/2011
319	11948	18/10/2008	28658/11	28/10/2011
320	11951	18/10/2008	28622/11	28/10/2011
321	11960	18/10/2008	28692/11	28/10/2011
322	11985	20/10/2008	26041/11	04/08/2011
323	11986	20/10/2008	26558/11	15/08/2011
324	12001	22/10/2008	26096/11	04/08/2011
325	12003	22/10/2008	26097/11	04/08/2011
326	12022	26/10/2008	28084/11	03/10/2011
327	12023	26/10/2008	28191/11	05/10/2011
328	12033	28/10/2008	28693/11	28/10/2011
329	12049	29/10/2008	28623/11	28/10/2011
330	12055	29/10/2008	26098/11	04/08/2011
331	12056	29/10/2008	28694/11	28/10/2011
332	12095	05/11/2008	26559/11	15/08/2011
333	12121	11/11/2008	28624/11	28/10/2011
334	12127	11/11/2008	29107/11	04/12/2011
335	12128	12/11/2008	29184/11	05/12/2011
336	12134	12/11/2008	29106/11	04/12/2011
337	12135	12/11/2008	29105/11	04/12/2011
338	12149	15/11/2008	25428/11	04/07/2011
339	12150	15/11/2008	25429/11	04/07/2011
340	12151	15/11/2008	25430/11	04/07/2011
341	12152	15/11/2008	25431/11	04/07/2011
342	12153	15/11/2008	25432/11	04/07/2011
343	12155	15/11/2008	26029/11	04/08/2011
344	12158	15/11/2008	25598/11	05/07/2011
345	12177	17/11/2008	26099/11	04/08/2011
346	12227	26/11/2008	28626/11	28/10/2011
347	12229	26/11/2008	29183/11	05/12/2011
348	12231	26/11/2008	28047/11	03/10/2011
349	12253	26/11/2008	26567/11	15/08/2011
350	12261	29/11/2008	28630/11	28/10/2011
351	12262	29/11/2008	28629/11	28/10/2011
352	12269	29/11/2008	28691/11	28/10/2011

Sr	Application No	Filing Date	Decision No	Decision Date
353	12294	30/11/2008	29517/11	18/12/2011
354	12304	01/12/2008	25450/11	04/07/2011
355	12376	14/12/2008	28190/11	05/10/2011
356	12380	14/12/2008	29536/11	18/12/2011
357	12398	14/12/2008	29534/11	18/12/2011
358	12403	14/12/2008	29533/11	18/12/2011
359	12406	14/12/2008	26061/11	04/08/2011
360	12419	16/12/2008	29531/11	18/12/2011
361	12422	16/12/2008	29530/11	18/12/2011
362	12456	17/12/2008	28627/11	28/10/2011
363	12459	17/12/2008	26560/11	15/08/2011
364	12496	20/12/2008	26548/11	15/08/2011
365	12531	21/12/2008	26561/11	15/08/2011
366	12533	21/12/2008	26562/11	15/08/2011
367	12536	21/12/2008	26062/11	04/08/2011
368	12555	24/12/2008	26109/11	04/08/2011
369	12610	05/01/2009	29187/11	05/12/2011
370	12613	06/01/2009	26541/11	14/08/2011
371	12614	06/01/2009	26540/11	14/08/2011
372	12616	06/01/2009	29186/11	05/12/2011
373	12623	07/01/2009	26539/11	14/08/2011
374	12628	10/01/2009	29182/11	05/12/2011
375	12629	10/01/2009	26354/11	12/08/2011
376	12638	10/01/2009	28348/11	16/10/2011
377	12640	10/01/2009	26538/11	14/08/2011
378	12641	10/01/2009	26537/11	13/08/2011
379	12647	11/01/2009	26353/11	12/08/2011
380	12651	11/01/2009	26534/11	13/08/2011
381	12663	14/01/2009	29104/11	04/12/2011
382	12675	17/01/2009	26535/11	13/08/2011
383	12677	17/01/2009	26536/11	13/08/2011
384	12681	17/01/2009	29584/11	18/12/2011
385	12692	21/01/2009	29181/11	05/12/2011
386	12712	24/01/2009	26288/11	10/08/2011
387	12719	24/01/2009	26533/11	13/08/2011
388	12721	24/01/2009	26532/11	13/08/2011
389	12723	24/01/2009	26531/11	13/08/2011

Sr	Application No	Filing Date	Decision No	Decision Date
390	12725	24/01/2009	26530/11	13/08/2011
391	12732	26/01/2009	26418/11	13/08/2011
392	12735	26/01/2009	29103/11	04/12/2011
393	12739	27/01/2009	26352/11	12/08/2011
394	12742	27/01/2009	26529/11	13/08/2011
395	12744	28/01/2009	26417/11	13/08/2011
396	12746	28/01/2009	26416/11	13/08/2011
397	12747	28/01/2009	26415/11	13/08/2011
398	12763	31/01/2009	26309/11	10/08/2011
399	12768	01/02/2009	26349/11	12/08/2011
400	12769	01/02/2009	26350/11	12/08/2011
401	12774	02/02/2009	29115/11	04/12/2011
402	12775	02/02/2009	29114/11	04/12/2011
403	12781	03/02/2009	26351/11	12/08/2011
404	12783	03/02/2009	26411/11	13/08/2011
405	12784	03/02/2009	26412/11	13/08/2011
406	12785	03/02/2009	26413/11	13/08/2011
407	12786	03/02/2009	26414/11	13/08/2011
408	12795	04/02/2009	26527/11	13/08/2011
409	12799	04/02/2009	26528/11	13/08/2011
410	12802	04/02/2009	29099/11	04/12/2011
411	12803	04/02/2009	29098/11	04/12/2011
412	12804	04/02/2009	29097/11	04/12/2011
413	12812	08/02/2009	28083/11	03/10/2011
414	12816	09/02/2009	29096/11	04/12/2011
415	12830	11/02/2009	26347/11	12/08/2011
416	12832	11/02/2009	26348/11	12/08/2011
417	12840	14/02/2009	26409/11	13/08/2011
418	12849	15/02/2009	26410/11	13/08/2011
419	12861	18/02/2009	26308/11	10/08/2011
420	12873	18/02/2009	29116/11	04/12/2011
421	12877	18/02/2009	26408/11	13/08/2011
422	12880	18/02/2009	26526/11	13/08/2011
423	12892	21/02/2009	26525/11	13/08/2011
424	12898	21/02/2009	26346/11	12/08/2011
425	12899	22/02/2009	26524/11	13/08/2011
426	12901	22/02/2009	26523/11	13/08/2011

Sr	Application No	Filing Date	Decision No	Decision Date
427	12903	22/02/2009	26287/11	10/08/2011
428	12911	24/02/2009	26305/11	10/08/2011
429	12912	24/02/2009	26306/11	10/08/2011
430	12913	24/02/2009	26307/11	10/08/2011
431	12926	25/02/2009	26520/11	13/08/2011
432	12927	25/02/2009	26521/11	13/08/2011
433	12928	25/02/2009	26522/11	13/08/2011
434	12937	25/02/2009	26345/11	12/08/2011
435	12946	28/02/2009	26519/11	13/08/2011
436	12952	28/02/2009	26518/11	13/08/2011
437	12956	02/03/2009	26406/11	13/08/2011
438	12957	02/03/2009	26407/11	13/08/2011
439	12968	03/03/2009	26513/11	13/08/2011
440	12980	04/03/2009	26514/11	13/08/2011
441	12993	08/03/2009	26515/11	13/08/2011
442	13010	10/03/2009	26516/11	13/08/2011
443	13011	10/03/2009	26517/11	13/08/2011
444	13024	11/03/2009	29297/11	10/12/2011
445	13029	11/03/2009	26405/11	13/08/2011
446	13030	11/03/2009	26404/11	13/08/2011
447	13035	11/03/2009	26511/11	13/08/2011
448	13045	14/03/2009	29559/11	18/12/2011
449	13046	14/03/2009	26512/11	13/08/2011
450	13060	17/03/2009	26403/11	13/08/2011
451	13081	18/03/2009	26508/11	13/08/2011
452	13082	18/03/2009	26509/11	13/08/2011
453	13085	18/03/2009	26510/11	13/08/2011
454	13094	21/03/2009	26286/11	10/08/2011
455	13095	21/03/2009	26507/11	13/08/2011
456	13096	21/03/2009	28927/11	01/11/2011
457	13098	22/03/2009	26402/11	13/08/2011
458	13100	22/03/2009	26505/11	13/08/2011
459	13106	23/03/2009	26506/11	13/08/2011
460	13111	24/03/2009	26304/11	10/08/2011
461	13129	25/03/2009	26344/11	12/08/2011
462	13141	25/03/2009	26401/11	13/08/2011
463	13142	25/03/2009	26400/11	13/08/2011

Sr	Application No	Filing Date	Decision No	Decision Date
464	13143	25/03/2009	26399/11	13/08/2011
465	13144	25/03/2009	26398/11	13/08/2011
466	13146	25/03/2009	26397/11	13/08/2011
467	13148	28/03/2009	26396/11	13/08/2011
468	13149	28/03/2009	26395/11	13/08/2011
469	13161	30/03/2009	26341/11	12/08/2011
470	13163	30/03/2009	26342/11	12/08/2011
471	13169	31/03/2009	26343/11	12/08/2011
472	13172	31/03/2009	28579/11	26/10/2011
473	13183	31/03/2009	26501/11	13/08/2011
474	13187	01/04/2009	26502/11	13/08/2011
475	13192	01/04/2009	29324/11	10/12/2011
476	13195	04/04/2009	29358/11	10/12/2011
477	13203	04/04/2009	26503/11	13/08/2011
478	13229	07/04/2009	26504/11	13/08/2011
479	13234	08/04/2009	26303/11	10/08/2011
480	13237	08/04/2009	26394/11	13/08/2011
481	13244	08/04/2009	26499/11	13/08/2011
482	13253	11/04/2009	26500/11	13/08/2011
483	13257	12/04/2009	26302/11	10/08/2011
484	13264	13/04/2009	26393/11	13/08/2011
485	13265	13/04/2009	29323/11	10/12/2011
486	13268	13/04/2009	26498/11	13/08/2011
487	13270	13/04/2009	26497/11	13/08/2011
488	13272	14/04/2009	26339/11	12/08/2011
489	13284	14/04/2009	29109/11	10/12/2011
490	13288	15/04/2009	26340/11	12/08/2011
491	13290	15/04/2009	27310/11	14/09/2011
492	13291	15/04/2009	27311/11	14/09/2011
493	13292	15/04/2009	27308/11	14/09/2011
494	13293	15/04/2009	27307/11	14/09/2011
495	13294	15/04/2009	27306/11	14/09/2011
496	13295	15/04/2009	28226/11	11/10/2011
497	13298	15/04/2009	26496/11	13/08/2011
498	13299	15/04/2009	26495/11	13/08/2011
499	13331	22/04/2009	26338/11	12/08/2011
500	13339	22/04/2009	27981/11	03/10/2011

Sr	Application No	Filing Date	Decision No	Decision Date
501	13345	22/04/2009	26494/11	13/08/2011
502	13347	22/04/2009	28082/11	03/10/2011
503	13352	25/04/2009	25407/11	04/07/2011
504	13362	27/04/2009	26337/11	12/08/2011
505	13363	27/04/2009	11/26336/11	12/08/2011
506	13368	27/04/2009	26493/11	13/08/2011
507	13383	29/04/2009	26335/11	12/08/2011
508	13390	29/04/2009	26490/11	13/08/2011
509	13391	29/04/2009	26491/11	13/08/2011
510	13392	29/04/2009	26492/11	13/08/2011
511	13400	02/05/2009	26392/11	13/08/2011
512	13410	04/05/2009	26334/11	12/08/2011
513	13415	05/05/2009	26489/11	13/08/2011
514	13424	06/05/2009	26275/11	10/08/2011
515	13425	06/05/2009	26485/11	13/08/2011
516	13434	06/05/2009	26486/11	13/08/2011
517	13443	09/05/2009	26487/11	13/08/2011
518	13466	13/05/2009	26331/11	12/08/2011
519	13467	13/05/2009	26332/11	12/08/2011
520	13468	13/05/2009	26333/11	12/08/2011
521	13485	13/05/2009	28539/11	20/10/2011
522	13490	13/05/2009	26488/11	13/08/2011
523	13493	13/05/2009	26391/11	13/08/2011
524	13509	18/05/2009	26390/11	13/08/2011
525	13510	18/05/2009	26389/11	13/08/2011
526	13519	19/05/2009	26388/11	13/08/2011
527	13542	20/05/2009	26483/11	13/08/2011
528	13550	23/05/2009	26484/11	13/08/2011
529	13554	24/05/2009	27472/11	15/09/2011
530	13555	24/05/2009	27471/11	15/09/2011
531	13556	24/05/2009	27470/11	15/09/2011
532	13557	24/05/2009	27473/11	15/09/2011
533	13560	25/05/2009	26330/11	12/08/2011
534	13584	27/05/2009	27998/11	03/10/2011
535	13585	27/05/2009	27999/11	03/10/2011
536	13586	27/05/2009	28000/11	03/10/2011
537	13587	27/05/2009	28005/11	03/10/2011

Sr	Application No	Filing Date	Decision No	Decision Date
538	13588	27/05/2009	28009/11	03/10/2011
539	13589	30/05/2009	26387/11	13/08/2011
540	13590	30/05/2009	28012/11	03/10/2011
541	13591	30/05/2009	28015/11	03/10/2011
542	13592	30/05/2009	28019/11	03/10/2011
543	13606	01/06/2009	26482/11	13/08/2011
544	13616	03/06/2009	26329/11	12/08/2011
545	13629	03/06/2009	26480/11	13/08/2011
546	13634	03/06/2009	26386/11	13/08/2011
547	13638	06/06/2009	26479/11	13/08/2011
548	13652	08/06/2009	26385/11	13/08/2011
549	13672	10/06/2009	26478/11	13/08/2011
550	13674	10/06/2009	26285/11	10/08/2011
551	13675	13/06/2009	26328/11	12/08/2011
552	13684	13/06/2009	26475/11	13/08/2011
553	13685	13/06/2009	26476/11	13/08/2011
554	13686	13/06/2009	26477/11	13/08/2011
555	13697	13/06/2009	26382/11	13/08/2011
556	13708	15/06/2009	26383/11	13/08/2011
557	13709	15/06/2009	26384/11	13/08/2011
558	13712	16/06/2009	28580/11	26/10/2011
559	13717	16/06/2009	26474/11	13/08/2011
560	13719	16/06/2009	26472/11	13/08/2011
561	13721	16/06/2009	26473/11	13/08/2011
562	13726	17/06/2009	26381/11	13/08/2011
563	13731	17/06/2009	28702/11	28/10/2011
564	13738	20/06/2009	26327/11	12/08/2011
565	13743	20/06/2009	28940/11	01/11/2011
566	13753	22/06/2009	28081/11	03/10/2011
567	13756	22/06/2009	26469/11	13/08/2011
568	13757	22/06/2009	28227/11	11/10/2011
569	13787	28/06/2009	26470/11	13/08/2011
570	13789	28/06/2009	26471/11	13/08/2011
571	13805	30/06/2009	26276/11	10/08/2011
572	13811	30/06/2009	26468/11	13/08/2011
573	13819	30/06/2009	26380/11	13/08/2011
574	13837	04/07/2009	26466/11	13/08/2011

Sr	Application No	Filing Date	Decision No	Decision Date
575	13846	05/07/2009	26467/11	13/08/2011
576	13863	08/07/2009	26280/11	10/08/2011
577	13869	08/07/2009	26301/11	10/08/2011
578	13902	13/07/2009	26378/11	13/08/2011
579	13908	14/07/2009	26379/11	13/08/2011
580	13913	14/07/2009	26465/11	13/08/2011
581	13917	15/07/2009	26326/11	12/08/2011
582	13923	15/07/2009	26463/11	13/08/2011
583	13925	15/07/2009	26464/11	13/08/2011
584	13934	18/07/2009	26283/11	10/08/2011
585	13935	18/07/2009	26284/11	10/08/2011
586	13945	20/07/2009	26325/11	12/08/2011
587	13961	22/07/2009	26462/11	13/08/2011
588	13975	25/07/2009	26377/11	13/08/2011
589	13985	27/07/2009	26460/11	13/08/2011
590	13986	27/07/2009	26461/11	13/08/2011
591	13990	27/07/2009	26376/11	13/08/2011
592	13993	28/07/2009	26279/11	10/08/2011
593	14068	05/08/2009	26375/11	13/08/2011
594	14078	08/08/2009	27997/11	03/10/2011
595	14079	08/08/2009	26300/11	10/08/2011
596	14085	08/08/2009	28080/11	03/10/2011
597	14087	08/08/2009	28079/11	03/10/2011
598	14101	11/08/2009	26374/11	13/08/2011
599	14104	11/08/2009	26455/11	13/08/2011
600	14111	12/08/2009	26456/11	13/08/2011
601	14119	15/08/2009	28078/11	03/10/2011
602	14131	17/08/2009	26457/11	13/08/2011
603	14144	19/08/2009	26458/11	13/08/2011
604	14160	22/08/2009	26459/11	13/08/2011
605	14173	26/08/2009	26324/11	12/08/2011
606	14174	26/08/2009	26453/11	13/08/2011
607	14188	26/08/2009	26454/11	13/08/2011
608	14192	26/08/2009	26373/11	13/08/2011
609	14207	29/08/2009	26448/11	13/08/2011
610	14216	31/08/2009	26449/11	13/08/2011
611	14238	02/09/2009	26450/11	13/08/2011

Sr	Application No	Filing Date	Decision No	Decision Date
612	14243	05/09/2009	26451/11	13/08/2011
613	14264	09/09/2009	26452/11	13/08/2011
614	14285	13/09/2009	26323/11	12/08/2011
615	14287	13/09/2009	26447/11	13/08/2011
616	14289	14/09/2009	26321/11	12/08/2011
617	14322	26/09/2009	26322/11	12/08/2011
618	14343	26/09/2009	26282/11	10/08/2011
619	14351	26/09/2009	26299/11	10/08/2011
620	14386	29/09/2009	26372/11	13/08/2011
621	14387	29/09/2009	26371/11	13/08/2011
622	14469	10/10/2009	26446/11	13/08/2011
623	14474	10/10/2009	26281/11	10/08/2011
624	14476	12/10/2009	26298/11	10/08/2011
625	14504	17/10/2009	26278/11	10/08/2011
626	14532	20/10/2009	26370/11	13/08/2011
627	14581	28/10/2009	26320/11	12/08/2011
628	14651	07/11/2009	28077/11	03/10/2011
629	14670	10/11/2009	26296/11	10/08/2011
630	14674	10/11/2009	26297/11	10/08/2011
631	14675	11/11/2009	26318/11	12/08/2011
632	14733	18/11/2009	26319/11	12/08/2011
633	14759	18/11/2009	26444/11	13/08/2011
634	14771	05/12/2009	26445/11	13/08/2011
635	14803	05/12/2009	26317/11	12/08/2011
636	14840	05/12/2009	26368/11	13/08/2011
637	14880	09/12/2009	26369/11	13/08/2011
638	14885	09/12/2009	26443/11	13/08/2011
639	14908	14/12/2009	26295/11	10/08/2011
640	14925	15/12/2009	26442/11	13/08/2011
641	15029	26/12/2009	27979/11	03/10/2011
642	15055	30/12/2009	26316/11	12/08/2011
643	15082	06/01/2010	26315/11	12/08/2011
644	15087	06/01/2010	26439/11	13/08/2011
645	15097	09/01/2010	26440/11	13/08/2011
646	15098	09/01/2010	26441/11	13/08/2011
647	15137	18/01/2010	26367/11	13/08/2011
648	15140	19/01/2010	26438/11	13/08/2011

Sr	Application No	Filing Date	Decision No	Decision Date
649	15152	23/01/2010	26366/11	13/08/2011
650	15176	26/01/2010	26436/11	13/08/2011
651	15183	27/01/2010	26437/11	13/08/2011
652	15239	07/02/2010	26314/11	12/08/2011
653	15256	10/02/2010	26434/11	13/08/2011
654	15259	10/02/2010	26435/11	13/08/2011
655	15266	13/02/2010	26365/11	13/08/2011
656	15321	23/02/2010	26312/11	12/08/2011
657	15413	10/03/2010	26313/11	12/08/2011
658	15481	20/03/2010	26294/11	10/08/2011
659	15515	24/03/2010	26364/11	13/08/2011
660	15735	26/04/2010	26293/11	10/08/2011
661	15811	05/05/2010	26363/11	13/08/2011
662	15845	11/05/2010	26433/11	13/08/2011
663	15988	01/06/2010	26277/11	10/08/2011
664	16006	01/06/2010	26291/11	10/08/2011
665	16040	09/06/2010	26292/11	10/08/2011
666	16078	15/06/2010	26362/11	13/08/2011
667	16091	16/06/2010	26430/11	13/08/2011
668	16092	16/06/2010	26431/11	13/08/2011
669	16128	21/06/2010	26432/11	13/08/2011
670	16183	29/06/2010	26290/11	10/08/2011
671	16213	30/06/2010	26426/11	13/08/2011
672	16243	04/07/2010	26427/11	13/08/2011
673	16244	04/07/2010	26428/11	13/08/2011
674	16294	12/07/2010	26429/11	13/08/2011
675	16344	20/07/2010	26289/11	10/08/2011
676	16409	28/07/2010	26425/11	13/08/2011
677	16624	01/09/2010	26424/11	13/08/2011
678	16627	01/09/2010	26356/11	13/08/2011
679	16628	01/09/2010	26357/11	13/08/2011
680	16629	01/09/2010	26358/11	13/08/2011
681	16630	01/09/2010	26359/11	13/08/2011
682	16632	01/09/2010	26360/11	13/08/2011
683	16633	01/09/2010	26361/11	13/08/2011
684	16739	21/09/2010	26421/11	13/08/2011
685	16745	25/09/2010	25406/11	04/07/2011

Sr	Application No	Filing Date	Decision No	Decision Date
686	16748	25/09/2010	26422/11	13/08/2011
687	16791	29/09/2010	26423/11	13/08/2011
688	16919	20/10/2010	26355/11	13/08/2011
689	17129	22/11/2010	26419/11	13/08/2011
690	17348	15/12/2010	26420/11	13/08/2011
691	17411	21/12/2010	25485/11	04/07/2011
692	17444	22/12/2010	27499/11	15/09/2011
693	17499	28/12/2010	26481/11	13/08/2011
694	17630	22/01/2011	25645/11	06/07/2011
695	17722	02/02/2011	26245/11	08/08/2011
696	17767	09/02/2011	27084/11	14/09/2011
697	17768	09/02/2011	27068/11	14/09/2011
698	17778	09/02/2011	25607/11	06/07/2011
699	17779	12/02/2011	25610/11	06/07/2011
700	17824	21/02/2011	27073/11	14/09/2011
701	17855	23/02/2011	27619/11	19/09/2011
702	17912	07/03/2011	25437/11	04/07/2011
703	18037	26/03/2011	27071/11	14/09/2011
704	18241	23/04/2011	27159/11	14/09/2011
705	18406	15/05/2011	27556/11	19/09/2011
706	19006	09/08/2011	29799/11	18/12/2011
707	19043	13/08/2011	29797/11	18/12/2011

Important Notices:

1-A decision was issued by mistake that patent application No. 10518 is Lapsed, then the decision was withdrawn - (See the list of withdrawn administrative decisions).

2-A decision was issued by mistake that patent application No. 12551 is Lapsed, then the decision was withdrawn - (See the list of withdrawn administrative decisions).

3-A decision was issued by mistake that patent application No. 14643 is Lapsed, then the decision was withdrawn - (See the list of withdrawn administrative decisions).

4-A decision was issued by mistake that patent application No. 14694 is Lapsed, then the decision was withdrawn - (See the list of withdrawn administrative decisions).

List of Lapsed Patents

From 01/07/2011 To 31/12/2011

Sr	Patent No	Decision No	Decision Date
1	GC0000003	28021/11	03/10/2011
2	GC0000004	28022/11	03/10/2011
3	GC0000005	27909/11	03/10/2011
4	GC0000007	27911/11	03/10/2011
5	GC0000023	27902/11	03/10/2011
6	GC0000038	27910/11	03/10/2011
7	GC0000042	27912/11	03/10/2011
8	GC0000045	28020/11	03/10/2011
9	GC0000062	28018/11	03/10/2011
10	GC0000065	27906/11	03/10/2011
11	GC0000076	27901/11	03/10/2011
12	GC0000080	27903/11	03/10/2011
13	GC0000099	27913/11	03/10/2011
14	GC0000101	28076/11	03/10/2011
15	GC0000103	28074/11	03/10/2011
16	GC0000163	27937/11	03/10/2011
17	GC0000169	27932/11	03/10/2011
18	GC0000171	28075/11	03/10/2011
19	GC0000172	27908/11	03/10/2011
20	GC0000198	28056/11	03/10/2011
21	GC0000203	27956/11	03/10/2011
22	GC0000207	28052/11	03/10/2011
23	GC0000210	27949/11	03/10/2011
24	GC0000215	27952/11	03/10/2011
25	GC0000227	27945/11	03/10/2011
26	GC0000233	28016/11	03/10/2011
27	GC0000236	28068/11	03/10/2011
28	GC0000250	27899/11	03/10/2011
29	GC0000252	27897/11	03/10/2011
30	GC0000253	27898/11	03/10/2011
31	GC0000263	28053/11	03/10/2011
32	GC0000264	28051/11	03/10/2011
33	GC0000266	27936/11	03/10/2011
34	GC0000271	27938/11	03/10/2011

Sr	Patent No	Decision No	Decision Date
35	GC0000272	27939/11	03/10/2011
36	GC0000280	27943/11	03/10/2011
37	GC0000291	27947/11	03/10/2011
38	GC0000298	28070/11	03/10/2011
39	GC0000306	27933/11	03/10/2011
40	GC0000311	28014/11	03/10/2011
41	GC0000314	27922/11	03/10/2011
42	GC0000322	27929/11	03/10/2011
43	GC0000333	28057/11	03/10/2011
44	GC0000335	28073/11	03/10/2011
45	GC0000344	27954/11	03/10/2011
46	GC0000345	27955/11	03/10/2011
47	GC0000347	27953/11	03/10/2011
48	GC0000348	27948/11	03/10/2011
49	GC0000350	27950/11	03/10/2011
50	GC0000352	27951/11	03/10/2011
51	GC0000357	27942/11	03/10/2011
52	GC0000359	27944/11	03/10/2011
53	GC0000374	27934/11	03/10/2011
54	GC0000383	27925/11	03/10/2011
55	GC0000393	27931/11	03/10/2011
56	GC0000398	27917/11	03/10/2011
57	GC0000405	27993/11	03/10/2011
58	GC0000409	28007/11	03/10/2011
59	GC0000414	27907/11	03/10/2011
60	GC0000429	27946/11	03/10/2011
61	GC0000432	28069/11	03/10/2011
62	GC0000435	27923/11	03/10/2011
63	GC0000436	27924/11	03/10/2011
64	GC0000437	27926/11	03/10/2011
65	GC0000438	27928/11	03/10/2011
66	GC0000456	27919/11	03/10/2011
67	GC0000465	28010/11	03/10/2011
68	GC0000485	27904/11	03/10/2011

Sr	Patent No	Decision No	Decision Date
69	GC0000486	27905/11	03/10/2011
70	GC0000488	27900/11	03/10/2011
71	GC0000489	27935/11	03/10/2011
72	GC0000493	27940/11	03/10/2011
73	GC0000502	28071/11	03/10/2011
74	GC0000511	27920/11	03/10/2011
75	GC0000513	27921/11	03/10/2011
76	GC0000516	27927/11	03/10/2011
77	GC0000518	28049/11	03/10/2011
78	GC0000538	28046/11	03/10/2011
79	GC0000543	28045/11	03/10/2011
80	GC0000545	28043/11	03/10/2011
81	GC0000558	28067/11	03/10/2011
82	GC0000568	27959/11	03/10/2011
83	GC0000570	28039/11	03/10/2011
84	GC0000572	28004/11	03/10/2011
85	GC0000573	28065/11	03/10/2011
86	GC0000578	27983/11	03/10/2011
87	GC0000607	28017/11	03/10/2011
88	GC0000616	28072/11	03/10/2011
89	GC0000624	28119/11	04/10/2011
90	GC0000625	28013/11	03/10/2011
91	GC0000627	27930/11	03/10/2011
92	GC0000629	28048/11	03/10/2011
93	GC0000632	28011/11	03/10/2011
94	GC0000638	27915/11	03/10/2011
95	GC0000645	28044/11	03/10/2011
96	GC0000650	28008/11	03/10/2011
97	GC0000651	27966/11	03/10/2011
98	GC0000655	28126/11	04/10/2011
99	GC0000663	28141/11	04/10/2011
100	GC0000664	28139/11	04/10/2011
101	GC0000665	28140/11	04/10/2011
102	GC0000668	28115/11	04/10/2011
103	GC0000669	28117/11	04/10/2011
104	GC0000672	27965/11	03/10/2011

Sr	Patent No	Decision No	Decision Date
105	GC0000676	28042/11	03/10/2011
106	GC0000677	28130/11	04/10/2011
107	GC0000682	27962/11	03/10/2011
108	GC0000686	27989/11	03/10/2011
109	GC0000688	28041/11	03/10/2011
110	GC0000694	28040/11	03/10/2011
111	GC0000696	27987/11	03/10/2011
112	GC0000699	28038/11	03/10/2011
113	GC0000704	28036/11	03/10/2011
114	GC0000707	28035/11	03/10/2011
115	GC0000708	28145/11	04/10/2011
116	GC0000709	27957/11	03/10/2011
117	GC0000714	27986/11	03/10/2011
118	GC0000715	27978/11	03/10/2011
119	GC0000717	28147/11	04/10/2011
120	GC0000725	27976/11	03/10/2011
121	GC0000728	27974/11	03/10/2011
122	GC0000729	28033/11	03/10/2011
123	GC0000732	28032/11	03/10/2011
124	GC0000758	28159/11	04/10/2011
125	GC0000760	28150/11	04/10/2011
126	GC0000761	28118/11	04/10/2011
127	GC0000763	28120/11	04/10/2011
128	GC0000769	27918/11	03/10/2011
129	GC0000770	28158/11	04/10/2011
130	GC0000778	28122/11	04/10/2011
131	GC0000780	27916/11	03/10/2011
132	GC0000792	27914/11	03/10/2011
133	GC0000798	28124/11	04/10/2011
134	GC0000808	27967/11	03/10/2011
135	GC0000810	28127/11	04/10/2011
136	GC0000812	27968/11	03/10/2011
137	GC0000814	28148/11	04/10/2011
138	GC0000832	28006/11	03/10/2011
139	GC0000842	27958/11	03/10/2011
140	GC0000859	28136/11	04/10/2011

Sr	Patent No	Decision No	Decision Date
141	GC0000861	27977/11	03/10/2011
142	GC0000868	28105/11	04/10/2011
143	GC0000870	28003/11	03/10/2011
144	GC0000872	27975/11	03/10/2011
145	GC0000875	28030/11	03/10/2011
146	GC0000878	27973/11	03/10/2011
147	GC0000884	28026/11	03/10/2011
148	GC0000913	28128/11	04/10/2011
149	GC0000918	27964/11	03/10/2011
150	GC0000930	28113/11	04/10/2011
151	GC0000938	28138/11	04/10/2011
152	GC0000939	28121/11	04/10/2011
153	GC0000946	28137/11	04/10/2011
154	GC0000950	28111/11	04/10/2011
155	GC0000951	28108/11	04/10/2011
156	GC0000952	28109/11	04/10/2011
157	GC0000964	28133/11	04/10/2011
158	GC0000971	28103/11	04/10/2011
159	GC0000975	28132/11	04/10/2011
160	GC0000976	27972/11	03/10/2011
161	GC0000979	28131/11	04/10/2011
162	GC0000981	27970/11	03/10/2011
163	GC0000987	28101/11	04/10/2011
164	GC0000988	28112/11	04/10/2011
165	GC0000989	28028/11	03/10/2011
166	GC0000994	27971/11	03/10/2011
167	GC0000995	28097/11	04/10/2011
168	GC0001000	27961/11	03/10/2011
169	GC0001035	27963/11	03/10/2011
170	GC0001043	28125/11	04/10/2011
171	GC0001048	28114/11	04/10/2011
172	GC0001057	27980/11	03/10/2011
173	GC0001059	28110/11	04/10/2011
174	GC0001065	28135/11	04/10/2011
175	GC0001076	28134/11	04/10/2011
176	GC0001089	28104/11	04/10/2011

Sr	Patent No	Decision No	Decision Date
177	GC0001090	28157/11	04/10/2011
178	GC0001092	28002/11	03/10/2011
179	GC0001099	28098/11	04/10/2011
180	GC0001115	28100/11	04/10/2011
181	GC0001121	28116/11	04/10/2011
182	GC0001130	28107/11	04/10/2011
183	GC0001131	28001/11	03/10/2011
184	GC0001200	28106/11	04/10/2011
185	GC0001217	28144/11	04/10/2011
186	GC0001218	28142/11	04/10/2011
187	GC0001219	28143/11	04/10/2011
188	GC0001222	28155/11	04/10/2011
189	GC0001223	28156/11	04/10/2011
190	GC0001225	28099/11	04/10/2011
191	GC0001247	27969/11	03/10/2011
192	GC0001253	28154/11	04/10/2011
193	GC0001255	28151/11	04/10/2011
194	GC0001261	28152/11	04/10/2011
195	GC0001277	28153/11	04/10/2011
196	GC0001313	28123/11	04/10/2011
197	GC0001395	28096/11	04/10/2011
198	GC0001404	28102/11	04/07/2011
199	GC0001451	28095/11	04/10/2011
200	GC0001595	28094/11	04/10/2011

Rejected Patent Applications

List of Rejected Patent Applications

From 01/01/2011 To 30/06/2011

Sr	Application No	Filing Date	Decision No	Decision Date
1	330	03/04/2008	25810/11	11/07/2011
2	736	24/06/2000	29497/11	18/12/2011
3	1246	24/03/2001	26691/11	24/08/2011
4	1259	28/03/2001	26777/11	11/09/2011
5	1361	13/05/2001	26039/11	04/08/2011
6	1393	26/05/2001	28654/11	28/10/2011
7	1467	30/06/2001	26085/11	04/08/2011
8	1528	25/07/2001	26059/11	04/08/2011
9	1680	16/10/2001	29345/11	10/12/2011
10	1688	20/10/2001	25742/11	11/07/2011
11	1765	08/12/2001	29069/11	04/12/2011
12	1770	22/12/2001	29332/11	10/12/2011
13	1785	22/12/2001	29498/11	18/12/2011
14	1945	13/04/2002	28669/11	28/10/2011
15	1956	17/04/2002	29333/11	10/12/2011
16	2094	23/06/2002	28942/11	01/11/2011
17	2147	29/07/2002	29346/11	10/12/2011
18	2214	18/09/2002	29334/11	10/12/2011
19	2215	18/09/2002	29336/11	10/12/2011
20	2299	02/11/2002	29337/11	10/12/2011
21	2312	09/11/2002	26095/11	04/08/2011
22	2322	18/11/2002	29338/11	10/12/2011
23	2327	18/11/2002	29339/11	10/12/2011
24	2350	25/11/2002	26058/11	04/08/2011
25	2352	25/11/2002	26056/11	04/08/2011
26	2363	26/11/2002	26555/11	15/08/2011
27	2373	14/12/2002	26032/11	04/08/2011
28	2386	14/12/2002	26695/11	24/08/2011
29	2391	14/12/2002	28507/11	18/10/2011
30	2397	18/12/2002	29365/11	10/12/2011
31	2407	21/12/2002	26057/11	04/08/2011
32	2411	21/12/2002	26079/11	04/08/2011

Sr	Application No	Filing Date	Decision No	Decision Date
33	2485	01/02/2003	28926/11	01/11/2011
34	2490	02/05/2003	28704/11	28/10/2011
35	2507	22/02/2003	28240/11	11/10/2011
36	2515	25/02/2003	29068/11	04/12/2011
37	2516	25/02/2003	29500/11	18/12/2011
38	2553	12/03/2003	29501/11	18/12/2011
39	2562	18/03/2003	26093/11	04/08/2011
40	2564	18/03/2003	26086/11	04/08/2011
41	2582	07/04/2003	29341/11	10/12/2011
42	2583	05/04/2003	26087/11	04/08/2011
43	2599	16/04/2003	29111/11	04/12/2011
44	2601	16/04/2003	29112/11	04/12/2011
45	2912	16/09/2003	29113/11	04/12/2011
46	2915	16/09/2003	29117/11	04/12/2011
47	2952	05/10/2003	29067/11	04/12/2011
48	3006	03/11/2003	29066/11	04/12/2011
49	3022	12/11/2003	29491/11	18/12/2011
50	3044	18/11/2003	28933/11	01/11/2011
51	3072	08/12/2003	28925/11	01/11/2011
52	3093	15/12/2003	28951/11	01/11/2011
53	3106	16/12/2003	28924/11	01/11/2011
54	3116	20/12/2003	28935/11	01/11/2011
55	3204	07/02/2004	29557/11	18/12/2011
56	3349	31/03/2004	26552/11	15/08/2011
57	3367	07/04/2004	29577/11	18/12/2011
58	3369	07/04/2004	29578/11	18/12/2011
59	3375	11/04/2004	29118/11	04/12/2011
60	3378	11/04/2004	26071/11	04/08/2011
61	3396	17/04/2004	29579/11	18/12/2011
62	3435	03/05/2004	29580/11	18/12/2011
63	3441	05/05/2004	29119/11	04/12/2011
64	3503	29/05/2004	28707/11	28/10/2011

Sr	Application No	Filing Date	Decision No	Decision Date
65	3527	05/06/2004	28242/11	11/10/2011
66	3545	12/06/2004	29618/11	18/12/2011
67	3548	13/06/2004	28711/11	28/10/2011
68	3554	16/06/2004	29581/11	18/12/2011
69	3588	26/06/2004	25443/11	04/07/2011
70	3639	17/07/2004	29582/11	18/12/2011
71	3640	17/07/2004	29583/11	18/12/2011
72	3641	17/07/2004	29576/11	18/12/2011
73	3647	18/07/2004	29575/11	18/12/2011
74	3654	19/07/2004	25663/11	06/07/2011
75	3657	21/07/2004	29574/11	18/12/2011
76	3680	28/07/2004	28936/11	01/11/2011
77	3692	04/08/2004	28440/11	16/10/2011
78	3694	04/08/2004	26076/11	04/08/2011
79	3712	08/08/2004	28254/11	11/10/2011
80	3733	18/08/2004	29366/11	10/12/2011
81	3744	21/08/2004	29573/11	18/12/2011
82	3762	28/08/2004	29572/11	18/12/2011
83	3803	14/09/2004	29567/11	18/12/2011
84	3809	14/09/2004	26075/11	04/08/2011
85	3877	09/10/2004	26074/11	04/08/2011
86	3903	16/10/2004	26073/11	04/08/2011
87	3914	19/10/2004	26055/11	04/08/2011
88	3916	19/10/2004	26072/11	04/08/2011
89	4014	21/11/2004	29538/11	18/12/2011
90	4015	21/11/2004	29519/11	18/12/2011
91	4043	01/12/2004	29065/11	04/12/2011
92	4044	01/12/2004	29064/11	04/12/2011
93	4083	13/12/2004	29520/11	18/12/2011
94	4149	19/12/2004	26020/11	04/08/2011
95	4188	08/01/2005	26692/11	24/08/2011
96	4202	12/01/2005	26650/11	24/08/2011
97	4222	29/01/2005	25441/11	04/07/2011
98	4398	09/03/2005	26025/11	04/08/2011
99	4413	12/03/2005	28932/11	01/11/2011

Sr	Application No	Filing Date	Decision No	Decision Date
100	4445	19/03/2005	29489/11	18/12/2011
101	4462	23/03/2005	29487/11	18/12/2011
102	4480	28/03/2005	29486/11	18/12/2011
103	4518	06/04/2005	29144/11	04/12/2011
104	4524	09/04/2005	29143/11	04/12/2011
105	4541	13/04/2005	29137/11	04/12/2011
106	4555	16/04/2005	29514/11	18/12/2011
107	4575	24/04/2005	28239/11	11/10/2011
108	4607	02/05/2005	29342/11	10/12/2011
109	4621	04/05/2005	29512/11	18/12/2011
110	4638	07/05/2005	29503/11	18/12/2011
111	4644	11/05/2005	26100/11	04/08/2011
112	4647	11/05/2005	28238/11	11/10/2011
113	4648	11/05/2005	29505/11	18/12/2011
114	4655	14/05/2005	28252/11	11/10/2011
115	4659	14/05/2005	29136/11	04/12/2011
116	4714	28/05/2005	26026/11	04/08/2011
117	4747	06/06/2005	26101/11	04/08/2011
118	4785	15/06/2005	26102/11	04/08/2011
119	4797	18/06/2005	26103/11	04/08/2011
120	4807	20/06/2005	28653/11	28/10/2011
121	4808	20/06/2005	28652/11	28/10/2011
122	4809	20/06/2005	28651/11	28/10/2011
123	4816	22/06/2005	26104/11	04/08/2011
124	4820	22/06/2005	25680/11	11/07/2011
125	4846	27/06/2005	25440/11	04/07/2011
126	4852	28/06/2005	28703/11	28/10/2011
127	4864	02/07/2005	29511/11	18/12/2011
128	4866	02/07/2005	26110/11	04/08/2011
129	4930	23/07/2005	29507/11	18/12/2011
130	4982	03/08/2005	25668/11	06/07/2011
131	5036	14/08/2005	29506/11	18/12/2011
132	5058	20/08/2005	29135/11	04/12/2011
133	5065	21/08/2005	28258/11	11/10/2011
134	5083	28/08/2005	25513/11	04/07/2011
135	5088	29/08/2005	25439/11	04/07/2011
136	5098	31/08/2005	29492/11	18/12/2011

Sr	Application No	Filing Date	Decision No	Decision Date
137	5123	07/09/2005	29343/11	10/12/2011
138	5205	25/09/2005	25438/11	04/07/2011
139	5208	25/09/2005	29494/11	18/12/2011
140	5518	14/12/2005	28735/11	29/10/2011
141	5619	26/12/2005	29562/11	18/12/2011
142	5772	04/02/2006	28734/11	29/10/2011
143	5844	20/02/2006	25589/11	05/07/2011
144	6036	02/04/2006	26060/11	04/08/2011
145	6385	07/06/2006	25531/11	04/07/2011
146	6659	26/07/2006	25532/11	04/07/2011
147	6703	29/07/2006	26779/11	11/09/2011
148	6731	06/08/2006	29564/11	18/12/2011
149	6936	19/09/2006	29495/11	18/12/2011
150	7062	11/10/2006	28241/11	11/10/2011
151	7249	20/11/2006	25530/11	04/07/2011
152	7263	22/11/2006	25436/11	04/07/2011
153	7353	06/12/2006	28695/11	28/10/2011
154	7373	11/12/2006	25529/11	04/07/2011
155	7537	25/12/2006	25528/11	04/07/2011
156	7581	09/01/2007	26693/11	24/08/2011
157	7691	30/01/2007	25527/11	04/07/2011
158	7755	10/02/2007	25515/11	04/07/2011
159	7834	24/02/2007	29301/11	10/12/2011
160	7862	03/03/2007	25511/11	04/07/2011
161	7891	06/03/2007	26077/11	04/08/2011
162	8011	26/03/2007	25841/11	12/07/2011
163	8013	26/03/2007	26782/11	11/09/2011
164	8055	01/04/2007	25510/11	04/07/2011
165	8063	02/04/2007	26543/11	14/08/2011
166	8107	10/04/2007	26694/11	24/08/2011
167	8204	23/04/2007	25509/11	04/07/2011
168	8619	30/06/2007	25442/11	04/07/2011
169	8722	18/07/2007	25514/11	04/07/2011
170	8909	18/08/2007	25508/11	04/07/2011
171	8928	21/08/2007	25506/11	04/07/2011

Sr	Application No	Filing Date	Decision No	Decision Date
172	8958	26/08/2007	25507/11	04/07/2011
173	9148	25/09/2007	28934/11	01/11/2011
174	9266	20/10/2007	28928/11	01/11/2011
175	9410	05/11/2007	28929/11	01/11/2011
176	9609	04/12/2007	28949/11	01/11/2011
177	9721	12/12/2007	27271/11	14/09/2011
178	9980	19/01/2008	29565/11	18/12/2011
179	10257	02/03/2008	28668/11	28/10/2011
180	10702	30/04/2008	29300/11	10/12/2011
181	10703	30/04/2008	26646/11	24/08/2011
182	10709	30/04/2008	29302/11	10/12/2011
183	11204	30/06/2008	28954/11	01/11/2011
184	11632	30/08/2008	28930/11	01/11/2011
185	11995	22/10/2008	28931/11	01/11/2011
186	12071	01/11/2008	27272/11	14/09/2011

Important Notices:

1-A decision was issued by mistake that patent application No. 4306 is Rejected, then the decision was withdrawn - (See the list of withdrawn administrative decisions).

2-A decision was issued by mistake that patent application No. 5732 is Rejected, then the decision was withdrawn - (See the list of withdrawn administrative decisions).

Change of the Ownership

List of Patent Applications with Change of Ownership

From 01/07/2011 To 31/12/2011

Sr	Application No	Date of Change Ownership	Name of Owner before Change	Name of Owner after Change
1	GCC/P/2003/2500	03/10/2011	@Balance B.V.	Prad Research and Development Limited
2	GCC/P/2003/2803	17/09/2011	Pharmacia Corporation	Boehringer Ingelheim International GmbH
3	GCC/P/2004/3385	05/12/2011	Shell Internationale Research Maatschappij B. V	ThruBit B.V
4	GCC/P/2007/7873	17/09/2011	Banyu Pharmaceutical Co Ltd	MSD K.K
5	GCC/P/2007/8188	17/09/2011	Banyu Pharmaceutical Co Ltd	MSD K.K
6	GCC/P/2007/8838	04/09/2011	Degussa GmbH	Evonik Degussa` GmbH
7	GCC/P/2007/8838	26/11/2011	Evonik Degussa` GmbH	Evonik Carbon Black GmbH
8	GCC/P/2007/8976	17/09/2011	Banyu Pharmaceutical Co Ltd	MSD K.K
9	GCC/P/2007/9773	17/09/2011	Banyu Pharmaceutical Co Ltd	MSD K.K
10	GCC/P/2008/10733	11/10/2011	Fermiscan Australia Pty Limited	SBC Research Pty Ltd
11	GCC/P/2008/10983	04/09/2011	Evonik Degussa GmbH	Evonik Carbon Black GmbH
12	GCC/P/2008/11393	15/11/2011	Huang Xiaodong	Shanghai Huapeng Explosion-Proof Science and Technology Co Ltd
13	GCC/P/2008/12330	04/09/2011	Evonik Degussa GmbH	Evonik Carbon Black GmbH
14	GCC/P/2009/13159	17/10/2011	Air Products and Chemicals Inc	Johnson Matthey PLC
15	GCC/P/2009/13413	04/09/2011	Evonik Degussa GmbH	Evonik Carbon Black GmbH
16	GCC/P/2009/13844	03/07/2011	Cooltech Applications Societe de Vehicules Electriques	Dow Kokam France SAS
17	GCC/P/2009/14247	15/11/2011	Basf Catalysts LLC Lummus Technology Inc	Basf Corporation Lummus Technology Inc

Sr	Application No	Date of Change Ownership	Name of Owner before Change	Name of Owner after Change
18	GCC/P/2009/14643	12/10/2011	Ting Choon Meng Chua Ngak Hwee	Healthstats International PTE Ltd
19	GCC/P/2009/14655	04/09/2011	Evonik Degussa GmbH	Evonik Carbon Black GmbH
20	GCC/P/2009/14753	04/09/2011	Evonik Degussa GmbH	Evonik Carbon Black GmbH
21	GCC/P/2009/14774	26/11/2011	Mitsubishi Chemical Corporation Mitsubishi Chemical Engineering Corporation	Mitsubishi Chemical Corporation
22	GCC/P/2009/15006	26/11/2011	Canada Chemical Corporation	WM GTL Inc
23	GCC 2010-15189	01/08/2011	Otsuka Chemical Co Ltd	Otsuka Pharmaceutical Co Ltd
24	GCC 2010-15196	11/10/2011	Glaxo Smithkline istrazivacki centar Zagreb D.O.O Glaxo Group Limited	Glaxo Group Limited
25	GCC 2010-15682	05/07/2011	Ten Cate Itex B.V	Xennia Holland B.V
26	GCC 2010-15682	05/07/2011	Xennia Holland B.V	Ten Cate Systems B.V
27	GCC 2010-16536	03/10/2011	@Balance B.V	PRAD Research and Development Limited
28	GCC 2010-17234	28/11/2011	Flo Dynamic Ltd	S2 Phase Ltd
29	GCC 2010-17472	28/11/2011	Flexitallic Limited Flexitallic Investments Inc	Flexitallic Investments Inc

List of Patent Applications with Change of Ownership

until 31/12/2011 and not Published Previously

Sr	Application No	Date of Change Ownership	Name of Owner before Change	Name of Owner after Change
1	GCC/P/2003/2500	02/04/2008	Shell Internationale Research Maatschappij B. V	@Balance B.V
2	GCC/P/2004/3384	20/03/2010	Merck & Co Inc	Merck Sharp & Dohme Corp
3	GCC/P/2005/4858	20/03/2010	Merck & Co Inc	Merck Sharp & Dohme Corp
4	GCC/P/2002/6176	20/03/2010	Merck & Co Inc	Merck Sharp & Dohme Corp
5	GCC/P/2004/10603	11/04/2010	Merck & Co Inc	Merck Sharp & Dohme Corp
6	GCC/P/2004/12774	20/03/2010	Merck & Co Inc	Merck Sharp & Dohme Corp

List of Patents with Change of Ownership

From 01/07/2011 To 31/12/2011

Sr	Patent No	Date of Change Ownership	Name of Owner before Change	Name of Owner after Change
1	GC 0000342	03/10/2011	@BALANCE B.V	PRAD Research and Development Limited
2	GC 0000851	03/10/2011	@BALANCE B.V	PRAD Research and Development Limited
3	GC 0001332	03/10/2011	@BALANCE B.V	PRAD Research and Development Limited

List of Patents with Change of Ownership until 31/12/2011

and not Published Previously

Sr	Patent No	Date of Change Ownership	Name of Owner before Change	Name of Owner after Change
1	GC 0000851	02/04/2008	Shell Internationale Research Maatschappij B. V	@BALANCE B.V
2	GC 0001332	02/04/2008	Shell Internationale Research Maatschappij B. V	@BALANCE B.V

Withdrawn Administrative Decisions

List of Withdrawn Administrative Decisions

From 01/07/2011 To 31/12/2011

Patent Applications

Sr	Application No	Filing Date	Withdrawal Decision		
			Decision No	Decision Date	Decision Type
1	4306	16/02/2005	25145/11	21/06/2011	Reject
2	5732	28/01/2006	25074/11	20/06/2011	Reject
3	10518	03/04/2008	17309/11	21/06/2011	Lapse
4	12551	24/12/2008	23376/11	20/06/2011	Lapse
5	14643	07/11/2009	24217/11	19/05/2011	Lapse
6	14694	11/11/2009	24074/11	19/05/2011	Lapse

Rectifications

Rectifications for the Previous Issues of the Patent Gazette

Sr	Issue	Page	Patent No	Before Rectification	After Rectification
1	16	29	GC 0001481	No. of claims: 22	No. of claims: 23
2	16	30	GC 0001482	[54] Method For Preparing An Extract From Ivy Leaves	Method for the production of ivy leaf extracts, and extract produced according to said method
3	16	36	GC 0001488	[73] Owner: Matsushita Electric Works, Ltd	[73] Owner: Panasonic Electric Works Co Ltd
4	16	63	GC 0001515	[72] Inventors: 1- Hiroshi Hachiya, 2- Masahiro Togo	[72] Inventors: 1- Hironori Miyaji, 2- Masahiro Tojo
5	16	72	GC 0001524	[72] Inventors: 1- Guillemont, Jerome Emile Georges, 2- Poignet, Herve Jean Joseph, 3- Venet, Marc Gaston, 4- Vernier Daniel F J,5- Van Gestel, Jozef Frans Elisabetha,6- Decrane, Laurence Francoise Bernadette,7- Odds, Frank Christopher	[72] Inventors: 1- Guillemont, Jerome Emile Georges, 2- Poignet, Herve Jean Joseph, 3- Venet, Marc Gaston, 4- Vernier Daniel F J,5- Van Gestel, Jozef Frans Elisabetha,6- Decrane, Laurence Francoise Bernadette,7- Odds, Frank Christopher 8-Imre Christian Francis Csoka , 9- Koenraad Jozef Lodewijk Marcel Andries
6	16	81	GC 0001533	No. of figures: 1	No. of figures: 2
7	16	86	GC 0001538	No. of claims: 13	No. of claims: 14
8	16	91	GC 0001543	No. of figures: 57	No. of figures:58
9	16	102	GC 0001554	[54] Re-Closable Pouring Element For Liquid Foods Packaged In Cardboard/Plastic Composite Packages	[54] Re-Closable Pouring Element For Liquid Foods Packaged In Cardboard/Plastic Composite Packages And Method for Its Assembly
10	16	103	GC 0001555	[54] Re-Closable Pouring Element For Liquid Foods Packaged In Cardboard/Plastic Composite Packages	[54] Re-Closable Pouring Element For Liquid Foods Packaged In Cardboard/Plastic Composite Packages And Method for Its Assembly
11	16	145	GC 0001597	Abstract not attach	Abstract attached
12	16	150	GC 0001602	[54] Partially Reduced Nanoparticle Additives To Lower The Amount of Carbon Monoxide and/or Nitric Oxide	[54] Partially Reduced Nanoparticle Additives To Lower The Amount of Carbon Monoxide and/or Nitric Oxide in the Mainstream Smoke of A Cigarette
13	16	158	GC 0001610	The front Page of the Patent not include abstract	The front Page of the Patent include abstract

Sr	Issue	Page	Patent No	Before Rectification	After Rectification
14	16	160	GC 0001612	The front Page of the Patent not include abstract	The front Page of the Patent include abstract
15	16	174	GC 0001626	[73] Owners: 1- Halliburton Energy Services INC. 2- Dalian Institute of Chemical Physics	[73] Owner: Halliburton Energy Services INC.

(19) pATENT OFFICE OF THE COOPERATION COUNCL FOR THE ARAB STATES OF THE GULF

(19)مكتب براءات الاختراع لمجلس التعاون لدول الخليج العربية

Corrected version [12] **Patent**

[11] Patent No.: GC0001481 **[45] Date of Publishing the Grant of the Patent: 30/09/2011 16/2011**	**Number of the Decision to Grant the Patent: 10/17555** **Date of the Decision to Grant the Patent: 03/09/2010**
[21] Application No.: GCC/P/2006/6057 **[22] Filing Date: 05/04/2006** **[30] Priority:** **[31] Priority No. [32] Priority date [33] State** **11/100.487 07/04/2005 US** **[72] Inventors: 1- Tim Hansen، 2- Yeong-Ching A. hong، 3- Sandra E. Kelly-Harris، 4- Jimbay P. Loh** **[73] Owner: Kraft Foods Global Brands LLC, Three Lakes Drive, Northfield, 60093, Illinois, USA** **[74] Agent: Saud M. A. Shawwaf**	**[51]Int. Cl.[7]: A23L 1/03, 1/24** **[56] Cited Documents:** **- US 501373 A (UNILEVER NV) 07 May 1991** **Examiner: Majed I.Al-Rufayyig**

[54] SHELF-STABLE COLD-PROCESSED FOOD COMPOSITIONS AND METHODS FOR THEIR PREPARATION

[57] Abstract: Very low pH, shelf-stable, unpasteurized food compositions with reduced sourness and methods of making same are provided. These food compositions are prepared without receiving a pasteurization or other heat treatment by acidifying a foodstuff with a membrane acidic electrodialyzed composition (ED), and/or addition of edible inorganic acids and/or or their metal acid salts, to provide very low pH values, such as pH 3.5 or lower, particularly 3.2 or lower, wherein the total organic acid content is 0.22 moles per 1000 grams of food composition or less, effective to enhance shelf-stability yet without introducing an objectionable sour taste or otherwise adversely effecting organoleptic properties of the resulting food compositions.

No. of claims: 23 No. of figures: 2

Note: Any interested individual may, within 3 months of publication of the grant, file objection thereof with the Grievance Committee after payment of grievance fees.

(19) pATENT OFFICE OF THE
COOPERATION COUNCL FOR
THE ARAB STATES OF THE GULF

(19) مكتب براءات الاختراع
لمجلس التعاون لدول الخليج العربية

Corrected version **[12] Patent**

[11] Patent No.: GC0001482

[45] Date of Publishing the Grant of the Patent: 30/09/2011 16/2011

Number of the Decision to Grant the Patent: 10/18588

Date of the Decision to Grant the Patent: 09/11/2010

[21] Application No.: GCC/P/2004/3818
[22] Filing Date: 18/09/2004
[30] Priority:
[31] Priority No. [32] Priority date [33] State
10345343. 19/09/2003 DE
[72] Inventors: 1-Wolfgang SCHNEIDER، 2-Frank RUNKEL، 3- Georg Maximilian ENGELHARD، 4-Oliver SCHMIDT
[73] Owner: Engelhard Arzneimittel GmbH & Co. KG, Herzbergstrase, 3,61138, Niederdorfelden, Germany
[74] Agent: Suleiman I. Al-Ammar

[51]Int. Cl.[7]: A61K 35/78; A61P 11/00
[56] Cited Documents:
- DATA BIOSIS `Online! BIOSCIDNCES INFORMATION SERVICE, PHILADELPHIA, PA, US; 1997
- DATABASE EMBASE `Online! ELSEVIER SCIENCE PUBLISHERS, AMSTERDAM, NL; 1986

Examiner: Nouf Saleh Al-Nassban

[54] METHOD FOR THE PRODUCTION OF IVY LEAF EXTRACTS, AND EXTRACT PRODUCED ACCORDING TO SAID METHOD.

[57] Abstract:The present invention relates to a method for preparing an extract from ivy leaves which includes the active ingredient hederacoside C and a-hederin, and to extracts prepared by this process. According to this there is initially provision of a first, a-hederin-rich extract and subsequently provision of a second, hederacoside C-rich extract. In a last step, the two extracts are blended to give an extract which has an adjusted hederacoside C content and an adjusted a-hederin conten

No. of claims: 9 **No. of figures: 1**

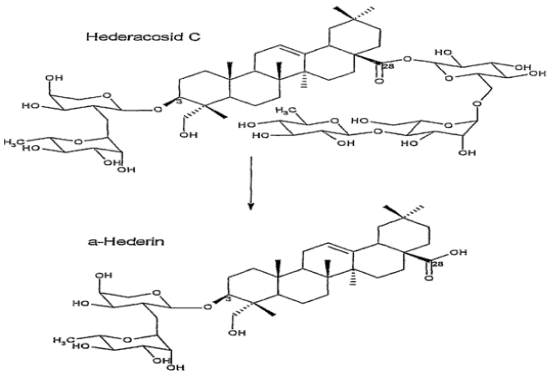

Note: Any interested individual may, within 3 months of publication of the grant, file objection thereof with the Grievance Committee after payment of grievance fees.

Corrected version **[12] Patent**

[11] Patent No.: GC 0001488 **[45] Date of Publishing the Grant of the Patent: 30/09/2011 16/2011**	**Number of the Decision to Grant the Patent: 10/19855** **Date of the Decision to Grant the Patent: 25/12/2010**
[21] Application No.: GCC/P/2005/5561 **[22] Filing Date: 20/12/2005** **[30] Priority:** **[31] Priority No. [32] Priority date [33] State** **2005-117411 2005/04/14 JP** **2004-367882 2004/12/20 JP** **[72] Inventors: 1- Chih Kuang Hsiao، 2- Hirohisa Okuno، 3- Toshiyuki Takii، 4- Masami Hayafune، 5- Yu Sheng Chen** **[73] Owner: Panasonic Electric Works Co Ltd.1048, Oaza-Kadoma, Kadoma-shi, Osaka, Japan** **[74] Agent: Suleiman I. Al-Ammar**	**[51] Int. CI. (2006.01): H01H 23/24, 9/16, 23/02, 21/02** **[56] Cited Documents:** **- JP 2000-251582 A(JIMBO DENKI KK) 14 September 2000** **Examiner: Ebrahim Al-Obody**

[54] SWITCH WITH DISPLAY AND SWITCH DEVICE

[57] Abstract: A switch with display includes a switch main body including a device body accommodating therein a double throw contact device; a luminous source for emitting light produced by a voltage generated between double throw contact points of the contact device; an operation handle pivotably installed at a front side of the switch main body, and a shorter width dimension of the operation handle being at least approximately identical to or larger than that of the front side of the switch main body; and a prism including two display parts for emanating the light from the luminous source to outside through displaying surfaces thereof and two light collection parts, for guiding the light from the luminous source to the displaying surfaces of the two display parts, the two display parts being provided at two opposite pivoting ends of the operation handle.

No. of claims: 11 No. of figures: 22

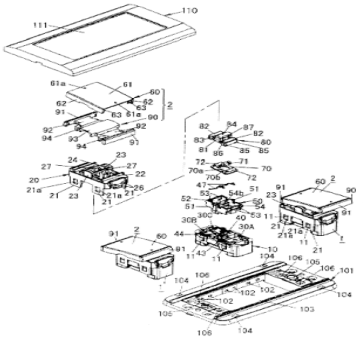

Note: Any interested individual may, within 3 months of publication of the grant, file objection thereof with the Grievance Committee after payment of grievance fees.

(19) pATENT OFFICE OF THE COOPERATION COUNCL FOR THE ARAB STATES OF THE GULF

(19) مكتب براءات الاختراع لمجلس التعاون لدول الخليج العربية

Corrected version

[12] Patent

[11] Patent No.: GC0001515 **[45] Date of Publishing the Grant of the Patent: 30/09/2011 16/2011**	**Number of the Decision to Grant the Patent: 11/22755** **Date of the Decision to Grant the Patent: 27/03/2011**
[21] Application No.: GCC/P/2005/5124 **[22] Filing Date: 07/09/2005** **[72] Inventors: 1- Hironori Miyaji، 2- Masahiro Tojo** **[73] Owner: Asahi Kasei Chemicals Corporation, 1-2, Yuraku-cho 1-chome, Chiyoda-ku, Tokyo 100-8440, Japan** **[74] Agent: Nassir Ali Kadsa**	**[51] Int. Cl.[7]: C07C 27/02, 29/128, 31/20, 68/06, 69/96** **[56] Cited Documents:** **- EP 1174406 A1 (ASAHI KASEI KABUSHIKI KAISHA OSAKA-SHI) 23 January 2002** **Examiner: Yahiya Naser Al-BuSafi**

[54] METHOD FOR PRODUCING A DIALKYL CARBONATE AND A DIOL

[57] Abstract: A method for producing a dialkyl carbonate and a diol, comprising: (a) effecting a transesterification reaction between a cyclic carbonate and an aliphatic monohydric alcohol in the presence of a trasesterification catalyst, thereby obtaining a reaction mixture containing a product dialkyl carbonate and a product diol, (b) withdrawing a dialkyl carbonate-containing liquid from the reaction mixture, followed by separation of dialkyl carbonate from the dialkyl carbonate-containing liquid, and (c) withdrawing a diol-containing liquid from the reaction mixture, followed by separation of the diol from the diol-containing liquid, wherein the cyclic carbonate contains a cyclic ether in an amount of from 0.1 to 3,000 ppm by weight, and the product dialkyl carbonate contains a carbonate ether of not more than `0,000 ppm by weight.

No. of claims: 8 No. of figures: 1

Note: Any interested individual may, within 3 months of publication of the grant, file objection thereof with the Grievance Committee after payment of grievance fees.

(19) pATENT OFFICE OF THE COOPERATION COUNCL FOR THE ARAB STATES OF THE GULF

(19) مكتب براءات الاختراع لمجلس التعاون لدول الخليج العربية

Corrected version **[12] Patent**

[11] Patent No.: GC0001524 **[45] Date of Publishing the Grant of the Patent: 30/09/2011 16/2011**	**Number of the Decision to Grant the Patent: 11/22764** **Date of the Decision to Grant the Patent: 27/03/2011**
[21] Application No.: GCC/P/2003/2796 **[22] Filing Date: 23/07/2003** **[30] Priority:** **[31] Priority No. [32] Priority date [33] State** **60/398.711 25/07/2002 US** **[72] Inventors: 1- Guillemont, Jerome Emile Georges، 2- Poignet, Herve Jean Joseph، 3- Venet, Marc Gaston، 4- Vernier Daniel F J،5- Van Gestel, Jozef Frans Elisabetha،6- Decrane, Laurence Francoise Bernadette،7- Odds, Frank Christopher 8-Imre Christian Francis Csoka , 9- Koenraad Jozef Lodewijk Marcel Andries** **[73] Owner: JANSSEN PHARMACEUTICA N. V., Turnhoutseweg 30, B-2340 Beerse, Belgium** **[74] Agent: Nassir Ali kadasa**	**[51]Int. CI.[7]: C0D4 01/12** **[56] Cited Documents:** **- WO 00 34265 A (SEPRACOR INC.) 15 June 2000** **- US 596572 A (WILLIAM Y. ELLIS et al.) 12 October 1999** **- WO 9937635 A (SMITHKLINE BEECHAM PLC) 29 July 1999** **Examiner: Nada Al-Behiji**

[54] MYCOBACTERIAL INHIBITORS

[57] Abstract: **The present invention relates to novel substituted quinoline derivatives according to the general Formula (Ia) or the general Formula (Ib)**

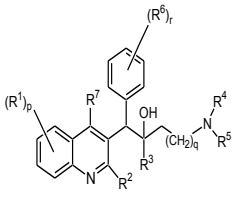

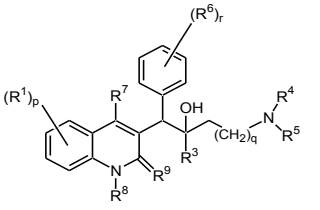

the pharmaceutically acceptable acid or base addition salts thereof, the stereochemically isomeric forms thereof, the tautomeric forms thereof and the *N*-oxide forms thereof. The claimed compounds are the pharmaceutically acceptable acid or base addition salts thereof, the stereochemically isomeric forms thereof, the tautomeric forms thereof and the *N*-oxide forms thereof. The claimed compounds are useful for the treatment of mycobacterial diseases, particularly those diseases caused by pathogenic mycobacteria such as *Mycobacterium tuberculosis, M. bovis, M. avium and M. marinum*. In particular, compounds are claimed in which, independently from each other, R^1 is bromo, p=1, R^2 is alkyloxy, R^3 is optionally substituted naphthyl or phenyl, q=1, R^4 and R^5 each independently are hydrogen, methyl or ethyl, R^6 is hydrogen, r is equal to 0 or 1 and R^7 is hydrogen. Also claimed is a composition comprising a pharmaceutically acceptable carrier and, as active ingredient, a therapeutically effective amount of the claimed compounds, the use of the claimed compounds or compositions for the manufacture of a medicament for the treatment of mycobacterial diseases and a process for preparing the claimed compounds.

Note: Any interested individual may, within 3 months of publication of the grant, file objection thereof with the Grievance Committee after payment of grievance fees.

No. of claims: 46

(19) pATENT OFFICE OF THE COOPERATION COUNCL FOR THE ARAB STATES OF THE GULF

(19) مكتب براءات الاختراع لمجلس التعاون لدول الخليج العربية

Corrected version [12] **Patent**

[11] Patent No.: GC0001533	**Number of the Decision to Grant the Patent: 11/21585**
[45] Date of Publishing the Grant of the Patent: 30/09/2011 16/2011	**Date of the Decision to Grant the Patent: 27/02/2011**
[21] Application No.: GCC/P/2005/4786 **[22] Filing Date: 15/06/2005** **[30] Priority:** **[31] Priority No. [32] Priority date [33] State** **10/869,598 16/06/2004 US**	**[51]Int. Cl.[7]: F25J 1/00, 3/00** **[56] Cited Documents:**
[72] Inventors: 1- YAO, Jame‹2- COOK, Dennis‹3- QUALLS, Wesley R.‹4- EATON, Anthony P. **[73] Owner: CONOCOPHILLIPS COMPANY, 600 North Dairy Ashford, Texas 77079, Houston, USA** **[74] Agent: Suleiman I. Al-Ammar**	**- US 6460350 B2 (Johnson et al.) 08 October 2002** **- US 6112549 A (Yao et al.) 05 September 2000** **- US 6564579 B1 (McCartney) 20 May 2003** **- US 5515681 A (Housnmand) 01 April 1997** **- US 5755114 A (Foglletta) 28 May 1998** **- US 5139458 A (Llu et al.) 18 August 1992** **- US 4548629 A (Chiu) 22 October 1985** **- EP 0520307 B1 (Llu) 28 February 1996** **- WO 9527179 A1 (Dubar) 12 October 1995** **Examiner: Ebrahim M AL-Qurashi**

[54] LNG SYSTEM WITH ENHANCED TURBOEXPANDER CONFIGURATION

[57] Abstract: Natural gas liquefaction system employing a turboexpander to convert excess pressure within a predominantly methane stream into work useable in another location within the liquefaction system. Primarily, the turboexpander is used to compress a refrigerant used in at least one of the refrigeration cycles within the liquefaction system.

No. of claims: 60 No. of figures: 2

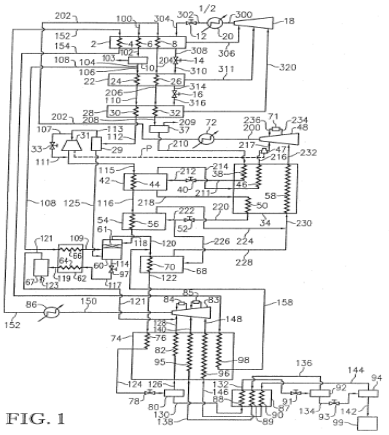

FIG. 1

Note: Any interested individual may, within 3 months of publication of the grant, file objection thereof with the Grievance Committee after payment of grievance fees.

(19) pATENT OFFICE OF THE COOPERATION COUNCL FOR THE ARAB STATES OF THE GULF

(19) مكتب براءات الاختراع لمجلس التعاون لدول الخليج العربية

Corrected version **[12] Patent**

[11] Patent No.: GC 0001538 **[45] Date of Publishing the Grant of the Patent: 30/09/2011 16/2011**	**Number of the Decision to Grant the Patent: 11/22466** **Date of the Decision to Grant the Patent: 20/03/2011**
[21] Application No.: GCC/P/2006/5959 **[22] Filing Date: 15/03/2006** **[30] Priority:** **[31] Priority No. [32] Priority date [33] State** **60/662.416 15/03/2005 US** **60/662.414 15/03/2005 US** **[72] Inventors: 1- Hamdi A. Tchelpi، 2- Patrick Jenny، 3- Seong H. Lee** **[73] Owner: Chevron U.S.A. Inc., Market States, San Francisco 555, California 94105,USA** **[74] Agent: Saud M. A. Shawwaf**	**[51] Int. Cl.[7]: G06G 7/48, 7/00** **[56] Cited Documents:** **- US2005/0172699A1 (HU Lin- Ying et al.) 11 August 2005** **- US 2005/0133261A (SCHLUMBERGER TECHNOLOGY CORPORATION) 23 January 2005** **Examiner: Ebrahim Al-Obody**

[54] STABLE METHOD SND APPARATUS FOR SOLVING S-SHAPED NON-LINEAR FUNCTIONS UTILIZING MODIFIED NEWTON-RAPHSON ALGORITHMS

[57] Abstract: An apparatus and method are provided for solving a non-linear S-shaped function F=f(S) which is representative of a property S in a physical system, such saturation in a reservoir simulation. A Newton iteration (T) is performed on the function f(S) at S^v to determine a next iterative value S^{v+1}. It is then determined whether S^{v+1} is located on the opposite side of the inflection point S^c from S^v. If S^{v+1} is located on the opposite side of the inflection point from S^v, then S^{v+1} ;is set to S^1, a modified new estimate. The modified new estimate, S^1, is preferably set to either the inflection point, S^c, or to an average value between S^v and S^{v+1}, i.e., $S^1=0.5(S^v+ S^{v+1})$. The above steps are repeated until S^{v+1} is within the predetermined convergence criteria.; Also, solution algorithms are described for two-phase and three-phase flow with gravity and capillary pressure.

No. of claims: 14 No. of figures: 24

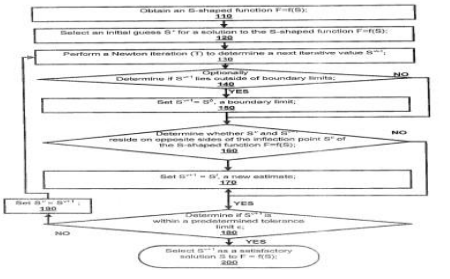

Note: Any interested individual may, within 3 months of publication of the grant, file objection thereof with the Grievance Committee after payment of grievance fees.

(19) pATENT OFFICE OF THE COOPERATION COUNCL FOR THE ARAB STATES OF THE GULF

(19) مكتب براءات الاختراع لمجلس التعاون لدول الخليج العربية

Corrected version **[12] Patent**

[11] Patent No.: GC 0001543 **[45] Date of Publishing the Grant of the Patent: 30/09/2011 16/2011**	**Number of the Decision to Grant the Patent: 11/21790** **Date of the Decision to Grant the Patent: 10/03/2011**
[21] Application No.: GCC/P/2005/5068 **[22] Filing Date: 23/08/2005** **[72] Inventors: 1- DAAN VEENINGEN، 2- John JEFFERS، 3- KRIS GIVENS، 4- Ganesan RAVICHANDRAN** **[73] Owner: Schlumberger Holdings Limited, P.O. Box 71, Craigmuir Chambers, Road Town, Tortola, British Virgin Isaland** **[74] Agent: Suleiman I. Al-Ammar**	**[51] Int. Cl.[7]: G06G 7/48** **[56] Cited Documents:** **- WO 2005001661 A2 (SCHLUMBERGER TECHNOLOGY CORP) 06 January 2005** **- EP1355245 A1 (ABB RES LTD) 22 October 2003** **- WO 2005091096 A1 (SCHLUMBERGER HOLDINGS LTD) 29 September 2005** **- US 20020103630 A1 (SCHLUMBERGER TECHNOLOGY CORP) 01 August 2002** **Examiner: Mohammed A. Aljaffar**

[54] METHOD SYSTEM AND PROGRAM STORAGE DEVICE FOR AUTOMATICALLY CALCULATING AND DISPLAYING TIME AND COST DATA IN A WELL PLANNING SYSTEM USING A MONTE CARLO SIMULATION SOFTWARE

[57] Abstract: A method of generating and displaying time and cost data representing the time and the cost to complete a plurality of oilfield related activities in response to a set of engineering results including wellbore geometry and drilling parameters comprises the steps of: (a) assembling a plurality of time data and a plurality of cost data based on the engineering results in response to a plurality of activity templates; and (b) generating a display of the time data and the cost data, the display illustrating the time data and the cost data representing the time and the cost to complete the plurality of oilfield related activities. The display includes a numerical display and a graphical display.

No. of claims: 45 No. of figures: 58

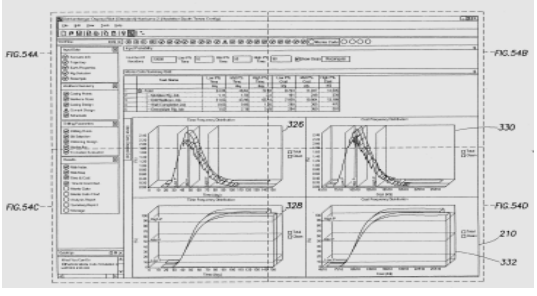

Note: Any interested individual may, within 3 months of publication of the grant, file objection thereof with the Grievance Committee after payment of grievance fees.

(19) pATENT OFFICE OF THE COOPERATION COUNCL FOR THE ARAB STATES OF THE GULF

(19) مكتب براءات الاختراع لمجلس التعاون لدول الخليج العربية

Corrected version **[12] Patent**

[11] Patent No.: GC 0001554 **[45] Date of Publishing the Grant of the Patent: 30/09/2011 16/2011**	**Number of the Decision to Grant the Patent: 11/21917** **Date of the Decision to Grant the Patent: 12/03/2011**
[21] Application No.: GCC/P/2007/8041 **[22] Filing Date: 31/03/2007** **[30] Priority:** **[31] Priority No. [32] Priority date [33] State** **102006015524.6-27 31/03/2006 DE** **[72] Inventor: Felix Bolli** **[73] Owner: SIG Technology AG, Laufengasse 18, CH-8212 Neuhausen am Rheinfall, Switzerland** **[74] Agent: Suleiman I. Al-Ammar**	**[51] Int. Cl.[7]: B65D 5/74** **[56] Cited Documents:** **- EP 1262412A1 (TETRA LAVAL HOLDINGS & FINANCE) 04 December 2002** **Examiner: Mousa'ab A. AlFadhala**

[54] RE-CLOSABLE POURING ELEMENT FOR LIQUID FOODS PACKAGED IN CARDBOARD/PLASTIC COMPOSITE PACKAGES AND METHOD FOR ITS ASSEMBLY

[57] Abstract: Illustrated and described is a re-closable pouring element for liquid foods packaged in cardboard/plastic composite packages, consisting of a base (1) encircled by a flange (4) and having both an inner thread (5) and an outer thread (6), an opening element (2) having at least one cutting edge (10) or the like as well as perforations and a screw cap (3) formed as a threaded lid, wherein the opening element (2) has an outer thread (8) and is arranged inside the base (1) and wherein the opening element (2) is formed so that when the screw cap (3) is operated for the first time it cuts an opening in the package material located under the pouring element. In order to ensure optimum emptying of product residues for every pack size with the same pouring element, it is provided that at least one window opening (o) is provided as an aperture, which window opening is/are arranged so that it/they points/point to one side after opening for the first time and after re-closing and repeated opening for emptying residues of the composite package points/point to the opposite side.

No. of claims: 16 No. of figures: 9

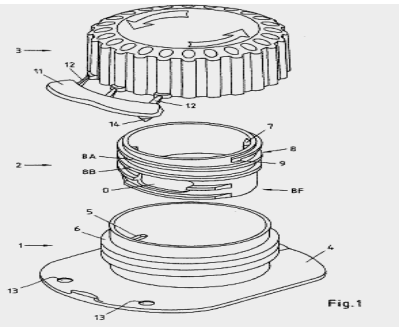

Fig.1

Note: Any interested individual may, within 3 months of publication of the grant, file objection thereof with the Grievance Committee after payment of grievance fees.

(19) pATENT OFFICE OF THE COOPERATION COUNCL FOR THE ARAB STATES OF THE GULF

(19) مكتب براءات الاختراع لمجلس التعاون لدول الخليج العربية

Corrected version **[12] Patent**

[11] Patent No.: GC 0001555 **[45] Date of Publishing the Grant of the Patent: 30/09/2011 16/2011**	**Number of the Decision to Grant the Patent: 11/21919** **Date of the Decision to Grant the Patent: 12/03/2011**
[21] Application No.: GCC/P/2007/8042 **[22] Filing Date: 31/03/2007** **[30] Priority:** **[31] Priority No. [32] Priority date [33] State** **102006015524.6-27 31/03/2006 DE** **[72] Inventor: Felix Bolli** **[73] Owner: SIG Technology AG, Laufengasse 18, CH-8212 Neuhausen am Rheinfall, Switzerland** **[74] Agent: Suleiman I. Al-Ammar**	**[51] Int. Cl.[7]: B65D 5/74** **[56] Cited Documents:** **- EP 1262412A1 (TETRA LAVAL HOLDINGS &FINANCE) 04 December 2002.** **Examiner: Mousa'ab A. AlFadhala**

[54] RE-CLOSABLE POURING ELEMENT FOR LIQUID FOODS PACKAGED IN CARDBOARD/PLASTIC COMPOSITE PACKAGES AND METHOD FOR ITS ASSEMBLY

[57] Abstract: **Illustrated and described is a re-closable pouring element for liquid food packaged in cardboard/plastic composite packages, consisting of a base (1) encircled by a flange (4) and having both a solidly constructed inner thread (5)and an outer thread (6) , an opening element (2) having at least one cutting edge (10) or the like and a screw cap (3) formed as a threaded lid, wherein the opening element (2) has a solidly constructed outer thread (8) and is arranged inside the base (1) and wherein the opening element (2) is formed in such a way that when the screw cap is operated for the first time, it cuts an opening in the package material located under the pouring element. The pouring element, with as simple an assembly as possible, should be able to reliably pierce the composite material of a drinks package, even without previous weakening, and to create a sufficiently large opening for pouring. To this end it is provided that both the outer thread (8) of the opening element (2) and the inner thread (5) of the base (1) are reduced or interrupted in the lower section at least in one region (8F) in such a way that during initial assembly the opening element (2) can be moved into the base (1) axially from above without screwing in, pressing or over-compressing the threads (5, 8) .**

No. of claims: 15 No. of figures: 7

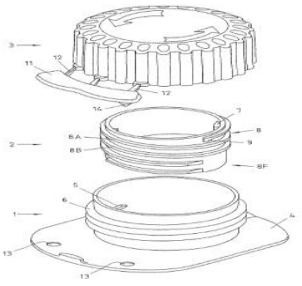

Note: Any interested individual may, within 3 months of publication of the grant, file objection thereof with the Grievance Committee after payment of grievance fees.

(19) pATENT OFFICE OF THE COOPERATION COUNCL FOR THE ARAB STATES OF THE GULF

(19) مكتب براءات الاختراع لمجلس التعاون لدول الخليج العربية

Corrected version

[12] Patent

[11] Patent No.: GC 0001597 **[45] Date of Publishing the Grant of the Patent: 30/09/2011 16/2011**	**Number of the Decision to Grant the Patent: 11/24796** **Date of the Decision to Grant the Patent: 15/06/2011**
[21] Application No.: GCC/P/2006/6852 **[22] Filing Date: 02/09/2006** **[30] Priority:** **[31] Priority No. [32] Priority date [33] State** **2005-253774 01/09/2005 JP** **[72] Inventor: Jyunji NIIMOTO** **[73] Owner: CHUGOKU MARINE PAINTS , LTD,1-7, Meijishinkai, Ohtake-shi, Hiroshima, JAPAN** **[74] Agent: Ahmed najdat bazarbashe**	**[51] Int. Cl.[7]: A01N37/12; A01P15/00** **[56] Cited Documents:** **- WO 2003/070832 A (29JOTUNAS) , 28 August** **- JP 2000-005692 A (Nippon Paint Marina Coatings Co., Ltd.) 11 January, 2000** **Examiner: Bander M. Al-Thobity**

[54] ANTIFOULING PAINT COMPOSITION ,ANTIFOULING COATING FILM, SUBSTRATE WITH COATING FILM, ANTIFOULING SUBSTRATE, FORMING METHODOF COATING FILM ON THE SURFACE OF THE SUBSTRATE AND ANTIFOULING METHOD OF SUBSTRATE

[57] Abstract:

The present invention provides an antifouling paint composition comprising a hydrolyzable copolymer (A) and an antifouling agent (B), wherein (A) is at least one kind of hydrolyzable copolymer selected from the group consisting of (a1) a copolymer containing a bond of metal salt, which is an acrylic polymer or a polyester resin, and has a side chain terminal group represented by the formula (I): -COO-M-O-COR1 [where M represents zinc or copper and R1 represents an organic group]; (a2) a copolymer containing a bond of metal salt composed of a component unit (a21) represented by the formula (II): CH2-C(R2)-COO-M-O-CO-C(R2)-CH2 [where M is the same as above and R2 represents H or CH3] and the other unsaturated monomer component unit (a22) which is copolymerizable with the monomer (II); and (a3) a sily l ester based copolymer composed of a component unit (a31) represented by the general formula (III): R7-CH-C(R3)-COO-SiR4R5R6 [where R3 is the same as R2, R4 to R6 represents a hydrocarbon group, R7 represents H or R8-O-CO- (with the proviso that R8 represents an organic group or -SiR9R10R11 (R9 to R11 is a hydrocarbon group) and the other unsaturated monomer component unit (a32) which is copolymerizable with the monomer (III); and zinc sulfide is contained at an amount of 10 to 500 parts by weight with respect to 100 parts by weight of (A) as said antifouling agent (B) The antifouling paint composition according to the present invention gives less burden to the environment and exhibits excellent antifouling properties to algae.

No. of claims: 45

Note: Any interested individual may, within 3 months of publication of the grant, file objection thereof with the Grievance Committee after payment of grievance fees.

(19) pATENT OFFICE OF THE COOPERATION COUNCL FOR THE ARAB STATES OF THE GULF

(19) مكتب براءات الاختراع لمجلس التعاون لدول الخليج العربية

Corrected version **[12] Patent**

[11] Patent No.: GC0001602 **[45] Date of Publishing the Grant of the Patent: 30/09/2011 16/2011**	**Number of the Decision to Grant the Patent: 11/24776** **Date of the Decision to Grant the Patent: 15/06/2011**
[21] Application No.: GCC/P/2003/2592 **[22] Filing Date: 12/04/2003** **[30] Priority:** **[31] Priority No. [32] Priority date [33] State** **60/371,729 12/04/2004 US** **[72] Inventors: 1- Firooz RASOULI،2- Ping LI،3- Mohammad HAJALIGOL** **[73] Owner: Philip Morris Products Inc., 3601 Commerce Road, Richmond, Virginia 23234, Richmond, USA** **[74] Agent: Ahmed Najdat Bazarbashe**	**[51] Int.Cl.[7]: A24D 1/00** **[56] Cited Documents:** **- WO 87/06104 A1 (HARDY et al.) 22 October 1987** **- US 5258340 A (AUGUSTINE et al.) 02 November 1993** **Examiner: Fahed Zoaid AlMutairi**

[54] PARTIALLY REDUCED NANOPARTICLE ADDITIVES TO LOWER THE AMOUNT OF CARBON MONOXIDE AND/OR NITRIC OXIDE IN THE MAINSTREAM SMOKE OF A CIGARETTE

[57] Abstract: Cut filler compositions, cigarettes, methods for making cigarettes and methods for smoking cigarettes which involve the use of partially reduced nanoparticle additives capable of acting as an oxidant for the conversion of carbon monoxide to carbon dioxide and/or as a catalyst for the conversion of carbon monoxide to carbon dioxide are provided. The compositions, articles and methods of the invention can be used to reduce the amount of carbon monoxide and/or nitric oxide present in mainstream smoke. The partially reduced additive can be formed by partially reducing Fe_2O_3, to produce a mixture of various reduced forms such as Fe_3O_4, FeO and/or Fe, along with unreduced Fe_2O_3.

No. of claims: 29 No. of figures: 25

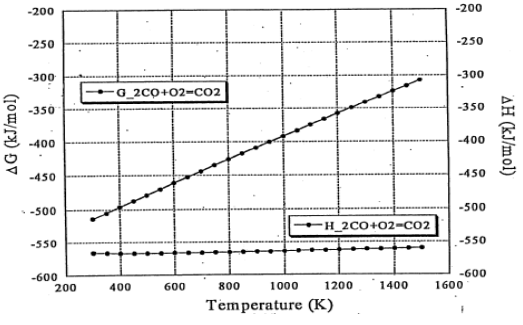

Note: Any interested individual may, within 3 months of publication of the grant, file objection thereof with the Grievance Committee after payment of grievance fees.

(19) pATENT OFFICE OF THE COOPERATION COUNCL FOR THE ARAB STATES OF THE GULF

(19) مكتب براءات الاختراع لمجلس التعاون لدول الخليج العربية

Corrected version [12] **Patent**

[11] Patent No.: GC0001610 **[45] Date of Publishing the Grant of the Patent: 30/09/2011 16/2011**	**Number of the Decision to Grant the Patent: 11/24848** **Date of the Decision to Grant the Patent: 16/06/2011**
[21] Application No.: GCC/P/2004/3459 **[22] Filing Date: 10/05/2004** **[30] Priority:** **[31] Priority No. [32] Priority date [33] State** **60/469.665 12/05/2003 US** **[72] Inventors: 1- Anthony C. Neubauer، 2- Brad A. Cobler، 3- William J. Michie, Jr.** **[73] Owner: Dow Global Technologies Inc., Washington Street, 1790 Building, Midland 48674, Michigan, USA** **[74] Agent: Saud M. A. Shawwaf**	**[51] Int. Cl.[7]: C08F 2/00, 210/16; C08L 23/16; C08J 5/18** **[56] Cited Documents:** **- US 6248831 B1 (HOFFMAN III WILLIAM A et al.) 19 June 2001** **- US 6147167 A (GARRISON PHILIP J et al.) 14 November 2000** **Examiner: Yahiya Naser Al-BuSafi**

[54] POLYMER COMPOSITION AND PROCESS TO MANUFACTURE HIGH MOLECULAR WEIGHT-HIGH DENSITY POLYETHYLENE AND FILM THEREFROM

[57] Abstract: **The present invention includes a multimodal polyethylene composition has (1) a density of at least about 0.940 g/cm^3 as measured by ASTM Method D-1505; (2) a melt flow index (I_5) of from about 0.2 to about 1.5 g/10 min (as measured by ASTM D-1238, measured at 190 °C and 5 kilograms); (3) a melt flow index ratio (I_{21}/I_5) of from about 20 to about 50; (4) a molecular weight distribution, Mw/Mn, of from about 20 to about 40; (5) a bubble stability measured on specified equipment according to specified conditions for a film of about 6 X 10^{-6} m thickness of at least about 1.22 m/s line speed, at least about 45 kg/hr (0.013 kg/sec) output rate, or at least about 0.5 lb/hr/rpm (0.0000011 kg/s/rps) specific output rate or a combination thereof; the composition comprising; and (6) a dart impact on 12.5 micron (1.25 X 10^{-5} m) film of at least 300 g; measured according to ASTM 1709, Method A; (A) a high molecular weight fraction which; (a) is present in an amount of from about 30 to about 70 weight percent (based on the total weight of the composition); (b) has a density of at least about 0.860 g/cm^3 as measured by ASTM D-1505; (c) has a melt flow index (I_{21}) of from about 0.01 to about 50 g/10 min (as measured by ASTM D-1238, measured at 190 °C and 21.6 kilograms); and (d) a melt flow index ratio (I_{21}/I_5) of from about 6 to about 12; and (B) a low molecular weight fraction which; (a) is present in an amount of from about 30 to about 70 weight percent (based on the total weight of the composition); (b) has a density of at least about 0.900 g/cm^3 as measured by ASTM D-1505; (c) has a melt flow index (I_2) of from about 0.5 to about 3000 g/10 min (as measured by ASTM D-1238, measured at 190 °C and 2.16 kilograms); (d) a melt flow index ratio (I_{21}/I_5) of from about 5 to about 15; and (e) is prepared using a mole ratio of alpha olefin to ethylene of less than or equal to about 0.001:1.**

No. of claims: 11 No. of figures: 1

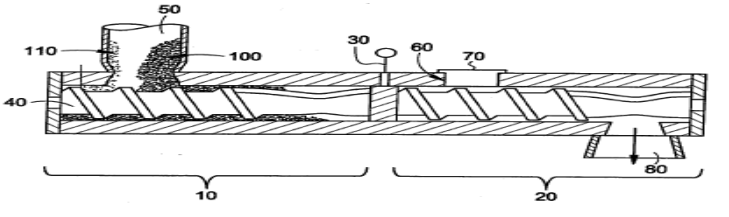

Note: Any interested individual may, within 3 months of publication of the grant, file objection thereof with the Grievance Committee after payment of grievance fees.

(19) pATENT OFFICE OF THE COOPERATION COUNCL FOR THE ARAB STATES OF THE GULF

(19) مكتب براءات الاختراع لمجلس التعاون لدول الخليج العربية

Corrected version **[12] Patent**

[11] Patent No.: GC 0001612 **[45] Date of Publishing the Grant of the Patent: 30/09/2011 16/2011**	**Number of the Decision to Grant the Patent: 11/24824** **Date of the Decision to Grant the Patent: 15/06/2011**
[21] Application No.: GCC/P/2006/7167 **[22] Filing Date: 06/11/2006** **[30] Priority:** **[31] Priority No. [32] Priority date [33] State** **0522706.1 07/11/2005 GB** **[72] Inventors: 1- Leo E. Reynders، 2- Tom Van Nuland** **[73] Owner: Exxonmobil Chemical Patents Inc.** **[74] Agent: Saud M. A. Shawwaf**	**[51] Int. Cl.[7]: C0F1 0/02; B01J 19/24** **[56] Cited Documents:** **- GB 2134121 A (*EL PASO POLYOLEFINS COMPANY) 08 August 1984** **Examiner: Ali ahmed Almlla**

[54] AN APPARATUS AND METHOD FOR THE PRODUCTION OF POLYETHYLENE AND ETHYLENE COPOLYMERS

[57] Abstract: The invention relates to an apparatus for the high pressure polymerisation of ethylene which comprises a high pressure reactor; a conduit for the supply of ethylene to the reactor, the conduit being provided with a preheater for heating the ethylene; a waste heat boiler for the production of medium pressure steam; a source of high pressure steam; and a steam distribution system comprising a medium pressure steam net for the distribution of medium pressure steam from the waste heat boiler, in which the preheater comprises first, second and third sections and the steam distribution system is such that the first section can be supplied with steam from the medium pressure steam net, the second section can be supplied with steam from the medium pressure steam net or with high pressure steam and the third section. can be supplied with high pressure steam.

No. of claims: 20 No. of figures: 2

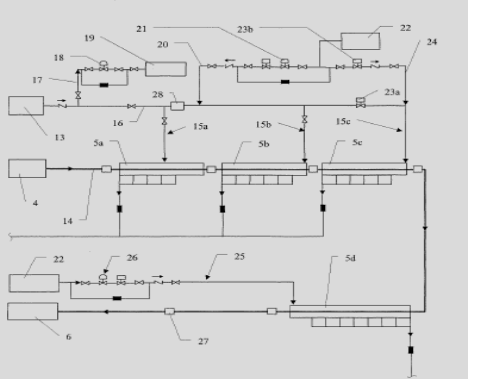

Note: Any interested individual may, within 3 months of publication of the grant, file objection thereof with the Grievance Committee after payment of grievance fees.

(19) pATENT OFFICE OF THE COOPERATION COUNCL FOR THE ARAB STATES OF THE GULF

(19) مكتب براءات الاختراع لمجلس التعاون لدول الخليج العربية

Corrected version **[12] Patent**

[11] Patent No.: GC 0001626 **[45] Date of Publishing the Grant of the Patent: 30/09/2011 16/2011**	**Number of the Decision to Grant the Patent: 11/21813** **Date of the Decision to Grant the Patent: 10/03/2011**
[21] Application No.: GCC/P/2007/8238 **[22] Filing Date: 28/04/2007** **[30] Priority:** **[31] Priority No. [32] Priority date [33] State** **11/380,715 28/04/2006 US** **[72] Inventors: 1- EARLES Ronald G.، 2- Jeffery B. Lasater، 3- VEHRA Imran، 4- HAY Richard T.، 5- STITKA Mark A.، 6- HOLCOMBE Michael W.، 7- BESTE Randal T.، 8- HARDIN John R.، 9- SHARONOV Sergei** **[73] Owner: Halliburton Energy Services INC. 10200 ، Houston, Texas 77072, USA [74] Agent: Ahmed najdat bazarbashe**	**[51] Int. Cl.[7]: E21B 47/12; B23B 19/02, 31/36; B23Q 3/14; E21B 7/04; G08C 17/04** **[56] Cited Documents:** **- US 6847304 B1 (RSI(BVI), INC) 25 January 2005** **- US 2006/0073722 A1 (VICTOR ALLAN) 06 April 2006** **Examiner: Mohammed A. Aljaffar**

[54] INDUCTIVE COUPLING SYSTEM

[57] Abstract: An inductive coupling system including a mandrel and an inner sleeve and outer housing that surround and rotate relative to the mandrel. The system also includes a mandrel electronics system and a housing electronics system that communicate electronically using a mandrel inductive coupler and a housing inductive coupler. The mandrel electronics system may also communicate with equipment on the surface. Alternatively, the system may include a mandrel and first and second mandrel electronics systems in different mandrel sections. The first and second mandrel electronics systems communicate electronically using a mandrel inductive coupler. Also alternatively, the system may include a mandrel and an inner sleeve and outer housing that surround and rotate relative to the mandrel. The system also includes a mandrel electronics system and a housing electronics system that communicate electronically using a housing inductive coupler.

No. of claims: 32 No. of figures: 9

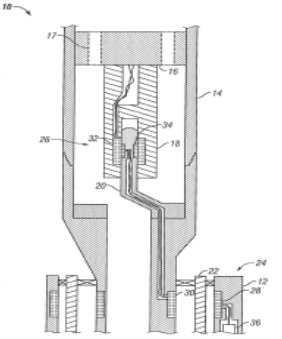

Note: Any interested individual may, within 3 months of publication of the grant, file objection thereof with the Grievance Committee after payment of grievance fees.